MP MASTER
MA34937

BK PRECISION®

MODEL 1443

SERVICE INFORMATION

SECTION I PARTS LISTS

SECTION II SCHEMATICS

SECTION III CALIBRATION PROCEDURE

499-417-9-001

MAXTEC INTERNATIONAL CORPORATION
PARTS LIST

MODEL: 1443
ISSUE: A

MAIN ASSEMBLY

CIRCUIT SYMBOL	DESCRIPTION	B&K-PRECISION PART NUMBER
	RESISTORS	
R1,101	10 ohm, 5%, 1/4W Deposited Carbon	002-104-5-100
R435	1k ohm, 5%, 1/4W Deposited Carbon	002-104-5-102
VR402/S403	20k ohm, Potentiometer with Switch	008-910-9-019
VR801/S801	10k ohm, Potentiometer with Switch	008-910-9-020
VR2004 (Focus)	2Meg ohm, Potentiometer	008-910-9-022
VR5001,5002	10k ohm, Potentiometer	008-910-9-021
	CAPACITORS	
C1,101	0.022uF, 10%, 630V Polyester	025-312-9-028
	INDUCTORS	
L301,302	0.27uH, 10%	047-094-9-020
L2001	Trace Rotation Coil	047-094-9-021
T1001	Power Transformer	065-258-9-001
	MISCELLANEOUS	
S1003 (AC Volt Select)	Slide Switch, D.P.D.T.	084-207-9-002
S1002 (AC - DC)	Slide Switch, D.P.D.T.	084-207-9-003
F1003(180V - 260V line)	0.3A,250V, 5 x 20 mm Slow Blow Fuse	198-300-0-300
F1003(90V - 125V line)	0.5A,250V, 5 x 20 mm Slow Blow Fuse	198-300-0-500
V2001	95SB31T Cathode Ray Tube (CRT)	230-044-9-001
BAT1001	NI CAD Battery Pack	212-005-9-001
	Carry Case, Soft	274-047-9-001B
	Rear Foot/Cord Wrap Post, Plastic	380-662-9-003
for Bottom	Plastic Foot	380-662-9-004
	Plastic Hole Plug	380-662-9-005
	CRT Filter/Window	380-662-9-007
	Lever Switch Handle, Plastic	384-141-9-001
	AC Power Cord	420-039-9-001
CN1007 to CN255	Wire Assembly, 3 Pin	428-234-9-002
CN1008 to CN303	Wire Assembly, 5 Pin	428-234-9-003
CN1009 to CN605	Wire Assembly, 3 Pin	428-234-9-004
CN1010 to CN807	Wire Assembly, 5 Pin	428-234-9-005
CN1011 to CN5010	Wire Assembly, 4 Pin	428-234-9-006
CN1006 to CN1016	Wire Assembly, 4 Pin	428-234-9-007
CN5008 & CN1012 to CN3002	Wire Assembly, 2 Pin	428-234-9-008
CN802 to CN803	Wire Assembly, 3 Pin	428-234-9-009
CN2001 to CN2004	Wire Assembly, 3 Pin	428-234-9-010
CN2002 to CN2004	Wire Assembly, 3 Pin	428-234-9-011
CN806 to CN2004	Wire Assembly, 4 Pin	428-234-9-012
CN252 to CN5003	Wire Assembly, 6 Pin	428-234-9-013
CN3 & CN103 to CN5002	Wire Assembly, 3 Pin	428-234-9-014
CN4 & CN104 to CN5005	Wire Assembly, 2 Pin	428-234-9-015
CN604 to CN5001	Wire Assembly, 7 Pin	428-234-9-016
CN402 to CN3	Wire Assembly, 2 Pin	428-234-9-017
CN5004 to VR5001 & VR5002	Wire Assembly, 4 Pin	428-234-9-018
CN403 to VR401	Wire Assembly, 6 Pin	428-234-9-019
CN2003 to VR2004	Wire Assembly, 3 Pin	428-234-9-020
CN801 to VR801	Wire Assembly, 5 Pin	428-234-9-021

MAXTEC INTERNATIONAL CORPORATION
PARTS LIST

MODEL: 1443
ISSUE: A

MAIN ASSEMBLY

CIRCUIT SYMBOL	DESCRIPTION	B&K-PRECISION PART NUMBER
CN804 to S801	Wire Assembly, 3 Pin	428-234-9-022
CN302 to CN2004	Wire Assembly, 3 Pin	428-234-9-023
CN251 to CN601	Wire Assembly, 5 Pin	428-234-9-024
CN4001 to CN4	Wire Assembly, 2 Pin	428-234-9-025
CN601 & CN3001 to CN5007	Wire Assembly, 2 Pin	428-234-9-026
CN253 to CN5006	Wire Assembly, 2 Pin	428-234-9-027
CN2 to CN401	Wire Assembly, 4 Pin	428-234-9-028
CN606 to CN607	Wire Assembly, 2 Pin	428-234-9-029
CN1002 to S1002	Wire Assembly, 4 Pin	428-234-9-030
CN1005 & K-0820 to Batt.	Wire Assembly, 3 Pin	428-234-9-031
	Instruction Manual	480-678-9-001
S/N 226-00001 > 226-00030	Assembled Vert. Pre-Amp PCB	546-060-9-002
S/N 226-00031 > 226-00120	Assembled Vert. Pre-Amp PCB	546-061-9-002
	Assembled Power Supply/Z Axis PCB	546-062-9-001
S/N 226-00121 >	Assembled Vert. Pre-Amp PCB	546-062-9-002
	Assembled Vert. Main Amp PCB	546-062-9-003
	Assembled Trigger Sweep Gen. PCB	546-062-9-004
	Assembled Horizontal Main Amp PCB	546-062-9-005
	Assembled Power Switch/Intensity PCB	546-062-9-006
	Assembled High Voltage PCB	546-062-9-007
	Assembled Attenuator Status PCB	546-062-9-008
	Assembled Readout Character Gen. PCB	546-062-9-009
for F1001	Fuse Holder	742-064-9-001
	Handle with Grip	746-097-9-001
	Handle Pivot Cover	746-097-9-002
	Press in M3 Spacer, 5mm Long	758-051-9-003
CN1001	AC Power Connector, Chassis Mount	770-035-9-001
CN1002	DC Power Connector, Chassis Mount	771-049-9-001
	Ground Terminal	771-050-9-001
CN1,101,405	BNC Connector, Panel Mount 2 Flats	772-024-9-002
Use for Ext. DC	DC Power Plug	775-069-9-001
CN4002	"Cal" Terminal	777-110-9-001

MAXTEC INTERNATIONAL CORPORATION
PARTS LIST

MODEL: 1443 ASSY# (546-060-9-002) ISSUE A
NOTES: (1) THIS ASS'Y USED WITH SERIAL #226-00001 thru # 226-00030
(2) * INDICATES NOMINAL VALUE SHOWN FOR A FACTORY SELECT PART

Vertical Pre-amp PCB Ass'y

CIRCUIT SYMBOL	DESCRIPTION	B&K-PRECISION PART NUMBER
	RESISTORS	
MR201	Resistor Network	012-054-9-001
R1,15,68,71,91,101,115,	)	
169,170,191,262,263,270	)47ohm, 5%, 1/6W Carbon Film	013-176-9-470
R12,13,112,113	500kohm, 1%, 1/4W Metal Film	013-173-9-047
R14,114	10Megohm, 5%, 1/4W Carbon Comp.	001-104-5-106
R16,19,25,64,73,83,116,	)	
119,125,164,173,183	)100ohm, 5%, 1/6W Carbon Film	013-176-9-101
R17,117	5.6kohm, 1%, 1/4W Metal Film	013-172-9-562
R18,84,118,184	3.9kohm, 1%, 1/4W Metal Film	013-172-9-392
R20,120	22kohm, 5%, 1/6W Carbon Film	013-176-9-223
R21,121	4.02kohm, 1%, 1/4W Metal Film	013-173-9-040
R22,122,222	4.7kohm, 5%, 1/6W Carbon Film	013-176-9-472
R23,123	470ohm, 1%, 1/4W Metal Film	013-172-9-471
R24,124	604ohm, 1%, 1/4W Metal Film	013-173-9-039
R26,45,126,145	60.4ohm, 1%, 1/4W Metal Film	013-173-9-038
R27,127,208,213	560ohm, 1%, 1/4W Metal Film	013-172-9-561
R28,128,255,260,261	680ohm, 5%, 1/6W Carbon Film	013-176-9-681
R29,129	16kohm, 1%, 1/4W Metal Film	013-173-9-045
R30,130	80kohm, 1%, 1/4W Metal Film	013-173-9-046
R31,131	820ohm, 5%, 1/6W Carbon Film	013-176-9-821
R32,33,132,133	10ohm, 5%, 1/4W Carbon Film	013-173-9-037
R34,37,81,134,137,181,	)	
221,227,229	)220ohm, 5%, 1/6W Carbon Film	013-176-9-221
R35,135	1.2kohm, 5%, 1/6W Carbon Film	013-176-9-122
R36,136	390ohm, 5%, 1/6W Carbon Film	013-176-9-391
R39,41,139,141	150ohm, 1%, 1/4W Metal Film	015-144-1-500
R40,140	300ohm, 1%, 1/4W Metal Film	013-173-9-044
R42,142	39ohm, 1%, 1/4W Metal Film	013-173-9-041
R43,143	90ohm, 1%, 1/4W Metal Film	013-173-9-043
R44,144	100ohm, 1%, 1/4W Metal Film	015-144-1-000
R51,55,82,151,155,182,	)	
226,228	)10kohm, 5%, 1/6W Carbon Film	013-176-9-103
R52,58,63,94,152,158,163,	)	
192,266,267	)22ohm, 5%, 1/6W Carbon Film	013-176-9-220
R53,153	68ohm, 5%, 1/6W Carbon Film	013-176-9-680
R54,154	6.8kohm, 5%, 1/6W Carbon Film	013-176-9-682
R56,156,258	330ohm, 5%, 1/6W Carbon Film	013-176-9-331
R57,157	56ohm, 5%, 1/6W Carbon Film	013-176-9-560
R59,60,159,160,201,302	4.7kohm, 1%, 1/4W Metal Film	013-172-9-472
R61,62,161,162	1.8kohm, 5%, 1/6W Carbon Film	013-176-9-182
R65,66,165,166	680ohm, 1%, 1/4W Metal Film	013-172-9-681
R67,167,168,214,215,256,	)	
257,268	)2.2kohm, 1%, 1/4W Metal Film	013-172-9-222
R70*,173*	470 - 1.5k ohm,5%,1/6W Carbon Film	-NONE-
R72,171,172,269	3.3kohm, 1%, 1/4W Metal Film	013-172-9-332
R74,75,174,175,207	100kohm, 5%, 1/6W Carbon Film	013-176-9-104

MAXTEC INTERNATIONAL CORPORATION
PARTS LIST

MODEL: 1443 ASSY# (546-060-9-002) ISSUE A
NOTES: (1) THIS ASS'Y USED WITH SERIAL #226-00001 thru # 226-00030
(2) * INDICATES NOMINAL VALUE SHOWN FOR A FACTORY SELECT PART

Vertical Pre-amp PCB Ass'y

CIRCUIT SYMBOL	DESCRIPTION	B&K-PRECISION PART NUMBER
R76,90,176,190,271,272	10ohm, 5%, 1/6W Carbon Film	013-176-9-100
R85,185	6.8kohm, 1%, 1/4W Metal Film	013-172-9-682
R86,186	200ohm, 1%, 1/4W Metal Film	013-172-9-201
R88,188	1.8kohm, 1%, 1/4W Metal Film	013-172-9-182
R89,189	1.5kohm, 5%, 1/6W Carbon Film	013-176-9-152
R92	560ohm, 5%, 1/6W Carbon Film	013-176-9-561
R93	3.3kohm, 5%, 1/6W Carbon Film	013-176-9-332
R203,204	150ohm, 1%, 1/4W Metal Film	013-172-9-151
R205,206	180ohm, 1%, 1/4W Metal Film	013-172-9-181
R209,210	82ohm, 5%, 1/6W Carbon Film	013-176-9-820
R211,251,252,253	1kohm, 5%, 1/6W Carbon Film	013-176-9-102
R212	150ohm, 5%, 1/6W Carbon Film	013-176-9-151
R254	8.2kohm, 5%, 1/6W Carbon Film	013-176-9-822
R264,265	390ohm, 1%, 1/4W Metal Film	013-172-9-391
VR20,55,120,155	50kohm, 0.1W Trimmer Pot.	010-093-9-022
VR28,128	1kohm, 0.1W Trimmer Pot.	010-093-9-019
VR54/S4,154/S104	10kohm Potentiometer with Switch	008-910-9-015
VR57,157	100ohm, 0.1W Trimmer Pot.	010-093-9-017
VR84,184	5kohm, 0.1W Trimmer Pot.	010-093-9-020
VR254	10kohm, 0.1W Trimmer Pot.	010-093-9-021
VR258	500ohm, 0.1W Trimmer Pot.	010-093-9-018
	CAPACITORS	
C3,4,5,6,67,91,95,103, 104,105,106,169,170,191, 255,270	0.01uF, +80/-20%, 50V Ceramic	020-457-9-089
C12,112	0.001uF, 10%, 500V Ceramic	020-457-9-090
C15,22,32,115,122,132,215	100uF, 20%, 25V Electrolytic	022-430-9-012
C16,116	47pF, 5%, 50V Ceramic	020-457-9-081
C17,117	0.001uF, 10%, 50V Polyester	025-312-9-017
C19,90,94,119,193,208	22uF, 20%, 25V Electrolytic	022-430-9-019
C23,123	0.1uF, +80/-20%, 50V Ceramic	020-457-9-091
C24,124	2pF, +/-0.25pF, 50V Ceramic	020-457-9-092
C34,27,134,137	10pF, +/-0.5pF, 50V Ceramic	020-457-9-076
C45	27pF, 5%, 50V Ceramic	020-457-9-079
C53,153	0.022uF, 10%, 50V Polyester	025-312-9-018
C58,158	33pF, 5%, 50V Ceramic	020-457-9-080
C61,64,161,164,262,263	680pF, 10%, 50V Ceramic	020-457-9-087
C73,173	8pF, +/-0.25pF, 50V Ceramic	020-457-9-075
C74,89,174,192	68pF, 5%, 50V Ceramic	020-457-9-082
C87,102,187,207	100pF, 5%, 50V Ceramic	020-457-9-083
C88,188	3pF, +/-0.25pF, 50V Ceramic	020-457-9-073
C93	220pF, 5%, 50V Ceramic	020-457-9-085
C145	18pF, +/-0.5pF, 50V Ceramic	020-457-9-093
C211	15pF, 5%, 50V Ceramic	020-457-9-077
C212	5pF, +/-0.25pF, 50V Ceramic	020-457-9-074
C223,224,271	1000pF, 10%, 50V Ceramic	020-457-9-088

MAXTEC INTERNATIONAL CORPORATION
PARTS LIST

MODEL: 1443 ASSY# (546-060-9-002) ISSUE A
NOTES: (1) THIS ASS'Y USED WITH SERIAL #226-00001 thru # 226-00030
(2) * INDICATES NOMINAL VALUE SHOWN FOR A FACTORY SELECT PART

Vertical Pre-amp PCB Ass'y

CIRCUIT SYMBOL	DESCRIPTION	B&K-PRECISION PART NUMBER
C251,253	120pF, 5%, 50V Ceramic	020-457-9-084
C256,264,271,272	47uF, 20%, 25V Electrolytic	022-430-9-017
	INDUCTORS	
L26,126	0.47uH, 20%	047-094-9-012
	SWITCHES	
S1,101	Lever Switch	080-036-9-002
S2/VR35,S102/VR135	Rotary Switch Ass'y with Pot.	083-336-9-001
S201	Lever Switch	080-036-9-001
	DIODES	
D12,14,112,114,201,202,	)	
203,204,205,206,207,208,	)	
209,210,211,212,213,214	)1SS133 Silicon Diode	151-120-9-002
D22,94,122,192,215	3.5V, 400mW Zener Diode	152-206-9-013
	TRANSISTORS	
Q1,101	2SK404E FET	182-102-9-001
Q2,9,102,111	2SC535C NPN Transistor	176-055-9-001
Q3,6,7,103,106,107,108,	)	
109,201,202	)2SA1206 PNP Transistor	177-071-9-003
Q4,5,104,105	2SC3355 NPN Transistor	176-213-9-001
Q8,10,110,112,253,254	2SA1029D PNP Transistor	177-128-9-001
Q203	2SC641KC NPN Transistor	176-237-9-007
Q251,252	2SC458C NPN Transistor	176-048-9-002
	INTEGRATED CIRCUITS	
IC1,101	I.C., TL071C	307-386-9-001
IC201	I.C., 74LS74	307-119-9-001
IC202	I.C., 74LS08	307-118-9-001
	MISCELLANEOUS	
CN201	3 Pin PCB Connector	757-188-9-001
CN4,102,104,253,255	2 Pin PCB Connector	757-202-9-001
CN251,254	3 Pin PCB Connector	757-202-9-002
CN2	4 Pin PCB Connector	757-202-9-003
CN252	6 Pin PCB Connector	757-202-9-005

NOTE: 546-060-9-002 significantly different from 546-061-9-002 and 546-062-9-002.

MAXTEC INTERNATIONAL CORPORATION
PARTS LIST

MODEL: 1443 ASSY# (546-061-9-002) ISSUE A

NOTES: (1) THIS ASS'Y USED WITH SERIAL #226-00031 thru # 226-00120
(2) * INDICATES NOMINAL VALUE SHOWN FOR A FACTORY SELECT PART

Vertical Pre-amp PCB Ass'y

CIRCUIT SYMBOL	DESCRIPTION	B&K-PRECISION PART NUMBER
	RESISTORS	
R2,11,17,22,33,64,83,102, 111,117,122,133,164,183	100ohm, 5%, 1/6W Carbon Film	013-176-9-101
R3,52,60,63,94,103,152, 160,163,192,266,267	22ohm, 5%, 1/6W Carbon Film	013-176-9-220
R4,104	900kohm, 1%, 1/4W Metal Film	013-173-9-050
R5,105	111kohm, 1%, 1/4W Metal Film	013-173-9-049
R6,106	18ohm, 5%, 1/6W Carbon Film	013-176-9-180
R7,28,90,107,128,190,271, 272	10ohm, 5%, 1/6W Carbon Film	013-176-9-100
R8,108	990kohm, 1%, 1/4W Metal Film	013-173-9-051
R9,109	10.1kohm, 1%, 1/4W Metal Film	013-173-9-048
R12,13,112,113	500kohm, 1%, 1/4W Metal Film	013-173-9-047
R14,114	10Megohm, 5%, 1/4W Carbon Comp.	001-104-5-106
R15,16,69,91,115,116,171, 172,191,262,263,270	47ohm, 5%, 1/6W Carbon Film	013-176-9-470
R18,19,118,119,207	100kohm, 5%, 1/6W Carbon Film	013-176-9-104
R20,120	5.6kohm, 1%, 1/4W Metal Film	013-172-9-562
R21,121	3.9kohm, 1%, 1/4W Metal Film	013-172-9-392
R23,123	22kohm, 5%, 1/6W Carbon Film	013-176-9-223
R24,124	4.02kohm, 1%, 1/4W Metal Film	013-173-9-040
R25,125	4.7kohm, 5%, 1/6W Carbon Film	013-176-9-472
R26,126	470ohm, 1%, 1/4W Metal Film	013-172-9-471
R27,41,43,81,127,141,143, 181,216,219,221	220ohm, 5%, 1/6W Carbon Film	013-176-9-221
R29,129	604ohm, 1%, 1/4W Metal Film	013-173-9-039
R31,131	60.4ohm, 1%, 1/4W Metal Film	013-173-9-038
R32,132,209,210	560ohm, 1%, 1/4W Metal Film	013-172-9-561
R34,134,255,260,261	680ohm, 5%, 1/6W Carbon Film	013-176-9-681
R35,135	16kohm, 1%, 1/4W Metal Film	013-173-9-045
R36,136	80kohm, 1%, 1/4W Metal Film	013-173-9-046
R37,137	820ohm, 5%, 1/6W Carbon Film	013-176-9-821
R38,39,138,139	10ohm, 5%, 1/4W Carbon Film	013-173-9-037
R40,140	1.2kohm, 5%, 1/6W Carbon Film	013-176-9-122
R42,142	390ohm, 5%, 1/6W Carbon Film	013-176-9-391
R44,46,144,146	150ohm, 1%, 1/4W Metal Film	015-144-1-500
R45,145	300ohm, 1%, 1/4W Metal Film	013-173-9-044
R47,147	37.4ohm, 1%, 1/4W Metal Film	015-144-3-748
R48,148	90ohm, 1%, 1/4W Metal Film	013-173-9-043
R49,149	100ohm, 1%, 1/4W Metal Film	015-144-1-000
R50,150	60ohm, 1%, 1/4W Metal Film	013-173-9-042
R51,54,82,151,154,182, 218,220	10kohm, 5%, 1/6W Carbon Film	013-176-9-103
R53,153	6.8kohm, 5%, 1/6W Carbon Film	013-176-9-682
R55,155	68ohm, 5%, 1/6W Carbon Film	013-176-9-680
R56,156,258	330ohm, 5%, 1/6W Carbon Film	013-176-9-331
R57,157	56ohm, 5%, 1/6W Carbon Film	013-176-9-560
R58,59,158,159,201,202	4.7kohm, 1%, 1/4W Metal Film	013-172-9-472

MAXTEC INTERNATIONAL CORPORATION
PARTS LIST

MODEL: 1443 ASSY# (546-061-9-002) ISSUE A
NOTES: (1) THIS ASS'Y USED WITH SERIAL #226-00031 thru # 226-00120
(2) * INDICATES NOMINAL VALUE SHOWN FOR A FACTORY SELECT PART

Vertical Pre-amp PCB Ass'y

CIRCUIT SYMBOL	DESCRIPTION	B&K-PRECISION PART NUMBER
R61,62,161,162	1.8kohm, 5%, 1/6W Carbon Film	013-176-9-182
R65,66,165,166	680ohm, 1%, 1/4W Metal Film	013-172-9-681
R67,167,168,213,214,256, 257,268	2.2kohm, 1%, 1/4W Metal Film	013-172-9-222
R68,169,170,269	3.3kohm, 1%, 1/4W Metal Film	013-172-9-332
R70*,173*	470 - 1.5k ohm,5%,1/6W Carbon Film	-NONE-
R84,184	3.9kohm, 5%, 1/6W Carbon Film	013-176-9-392
R85,185	6.8kohm, 1%, 1/4W Metal Film	013-172-9-682
R86,186	200ohm, 1%, 1/4W Metal Film	013-172-9-201
R88,188	1.8kohm, 1%, 1/4W Metal Film	013-172-9-182
R89,189	1.5kohm, 5%, 1/6W Carbon Film	013-176-9-152
R92	560ohm, 5%, 1/6W Carbon Film	013-176-9-561
R93	3.3kohm, 5%, 1/6W Carbon Film	013-176-9-332
R203,204	150ohm, 1%, 1/4W Metal Film	013-172-9-151
R205,206	270ohm, 1%, 1/4W Metal Film	013-172-9-271
R208,251,252,253	1kohm, 5%, 1/6W Carbon Film	013-176-9-102
R211,212	82ohm, 5%, 1/6W Carbon Film	013-176-9-820
R215	150ohm, 5%, 1/6W Carbon Film	013-176-9-151
R217	36kohm, 5%, 1/6W Carbon Film	013-176-9-363
R254	8.2kohm, 5%, 1/6W Carbon Film	013-176-9-822
R264,265	390ohm, 1%, 1/4W Metal Film	013-172-9-391
RA201	Resistor Network	012-054-9-001
VR1,5,101,105	47kohm, 0.1W Trimmer Pot.	010-093-9-028
VR2,102	1kohm, 0.1W Trimmer Pot.	010-093-9-025
VR4/S4,VR104/S104	10kohm Potentiometer with Switch	008-910-9-016
VR6,106	100ohm, 0.1W Trimmer Pot.	010-093-9-023
VR81,181	4.7kohm, 0.1W Trimmer Pot.	010-093-9-026
VR251	10kohm, 0.1W Trimmer Pot.	010-093-9-027
VR252	470ohm, 0.1W Trimmer Pot.	010-093-9-024
	CAPACITORS	
C2,83,102,183,201	100pF, 5%, 50V Ceramic	020-457-9-083
C3,103	33pF, 5%, 50V Ceramic	020-457-9-080
C4,104	330pF, 10%, 50V Ceramic	020-457-9-086
C5,105	0.001uF, 10%, 500V Ceramic	020-457-9-090
C6,106	47pF, 5%, 50V Ceramic	020-457-9-081
C7,107	8pF, +/-0.25pF, 50V Ceramic	020-457-9-075
C8,85,108,186	68pF, 5%, 50V Ceramic	020-457-9-082
C9,109	0.001uF, 10%, 50V Polyester	025-312-9-017
C10,11,17,110,111,117, 211,251	0.1uF, +80/-20%, 50V Ceramic	020-457-9-091
C12,16,18,112,116,118,208	100uF, 20%, 25V Electrolytic	022-430-9-012
C13,81,88,113,181,182,203	22uF, 20%, 25V Electrolytic	022-430-9-019
C14,114,84,185	3pF, +/-0.25pF, 50V Ceramic	020-457-9-073
C19,20,119,120	10pF, +/-0.5pF, 50V Ceramic	020-457-9-076
C21,121	27pF, 5%, 50V Ceramic	020-457-9-079
C22,23,29,82,87,122,123, 129,130,187,207,212,254,		

MAXTEC INTERNATIONAL CORPORATION
PARTS LIST

MODEL: 1443 ASSY# (546-061-9-002) ISSUE A

NOTES: (1) THIS ASS'Y USED WITH SERIAL #226-00031 thru # 226-00120
(2) * INDICATES NOMINAL VALUE SHOWN FOR A FACTORY SELECT PART

Vertical Pre-amp PCB Ass'y

CIRCUIT SYMBOL	DESCRIPTION	B&K-PRECISION PART NUMBER
260	)0.01uF, +80/-20%, 50V Ceramic	020-457-9-089
C24,124	0.022uF, 10%, 50V Polyester	025-312-9-018
C26,126	22pF, 5%, 50V Ceramic	020-457-9-078
C27,28,127,128,257,258	680pF, 10%, 50V Ceramic	020-457-9-087
C86	220pF, 5%, 50V Ceramic	020-457-9-085
C89*,188*	1 - 3pF, +/-0.25pF, 50V Ceramic	-NONE-
C202	15pF, 5%, 50V Ceramic	020-457-9-077
C206	5pF, +/-0.25pF, 50V Ceramic	020-457-9-074
C209,210,261	1000pF, 10%, 50V Ceramic	020-457-9-088
C252,253	120pF, 5%, 50V Ceramic	020-457-9-084
C256,259,271,272	47uF, 20%, 25V Electrolytic	022-430-9-017
VC1,3,101,103	12pF, 250V Ceramic Trimmer	028-126-9-002
VC2,4,102,104	6pF, 250V Ceramic Trimmer	028-126-9-001
	INDUCTORS	
L1,101	0.47uH, 20%	047-094-9-012
	SWITCHES	
S1,101	Lever Switch	080-036-9-002
S2/S3/VR3,S102/S103/VR103	Rotary Switch Ass'y with Pot.	083-336-9-002
S201	Lever Switch	080-036-9-001
	DIODES	
D1,2,101,102,201,202,203,	)	
204,205,206,207,208,209,	)	
210,211,212,213,214	)1SS133 Silicon Diode	151-120-9-002
D3,81,103,181,215	3.5V, 400mW Zener Diode	152-206-9-014
	TRANSISTORS	
Q1,101	2SK514-H FET	182-106-9-002
Q2,9,102,111	2SC535C NPN Transistor	176-055-9-001
Q4,5,104,105	2SC3355 NPN Transistor	176-213-9-001
Q3,6,7,103,106,107,108,	)	
109,201,202	)2SA1206 PNP Transistor	177-071-9-003
Q8,10,110,112,253,254	2SA1029D PNP Transistor	177-128-9-001
Q203	2SC641KC NPN Transistor	176-237-9-007
Q251,252	2SC458C NPN Transistor	176-048-9-002
	INTEGRATED CIRCUITS	
IC1,101	I.C., TL071C	307-386-9-001
IC201	I.C., 74LS74	307-119-9-001
IC202	I.C., 74LS08	307-118-9-001
	MISCELLANEOUS	
CN201	3 Pin PCB Connector	757-188-9-001
CN4,102,104,253,254	2 Pin PCB Connector	757-202-9-001
CN255	3 Pin PCB Connector	757-202-9-002

MAXTEC INTERNATIONAL CORPORATION
PARTS LIST

MODEL: 1443 ASSY# (546-061-9-002) ISSUE A

NOTES: (1) THIS ASS'Y USED WITH SERIAL #226-00031 thru # 226-00120
(2) * INDICATES NOMINAL VALUE SHOWN FOR A FACTORY SELECT PART

Vertical Pre-amp PCB Ass'y

CIRCUIT SYMBOL	DESCRIPTION	B&K-PRECISION PART NUMBER
CN2	4 Pin PCB Connector	757-202-9-003
CN251	5 Pin PCB Connector	757-202-9-004
CN252	6 Pin PCB Connector	757-202-9-005

NOTE: 546-061-9-002 same as Issue A of 546-062-9-002 except for Rotary Sw. Ass'y (S2/S3/VR3,S102/S103/VR103).

MAXTEC INTERNATIONAL CORPORATION
PARTS LIST

MODEL: 1443 ASSY# (546-062-9-001) ISSUE A

Power Supply Z Axis Amp PCB Ass'y

CIRCUIT SYMBOL	DESCRIPTION	B&K-PRECISION PART NUMBER
	RESISTORS	
R1001	200ohm, 5%, 2W Metal Oxide	013-173-9-055
R1002	39kohm, 1%, 1/4W Metal Film	013-172-9-393
R1003	15.0kohm, 1%, 1/4W Metal Film	015-144-1-502
R1004,1005,1015,1025,1027	10kohm, 1%, 1/4W Metal Film	013-172-9-103
R1006,1009,1078,1079,1080	100kohm, 5%, 1/6W Carbon Film	013-176-9-104
R1007	68kohm, 5%, 1/6W Carbon Film	013-176-9-683
R1008,3008	470kohm, 5%, 1/6W Carbon Film	013-176-9-474
R1010,1022,2007	47ohm, 5%, 1/6W Carbon Film	013-176-9-470
R1011	160kohm, 1%, 1/4W Metal Film	013-173-9-052
R1012	5.1kohm, 1%, 1/4W Metal Film	013-172-9-512
R1013	15kohm, 5%, 1/6W Carbon Film	013-176-9-153
R1014	15kohm, 1%, 1/4W Metal Film	013-172-9-153
R1016,1030,3004	100ohm, 5%, 1/6W Carbon Film	013-176-9-101
R1017	330ohm, 5%, 1/6W Carbon Film	013-176-9-331
R1020	22ohm, 5%, 1W Metal Oxide	013-173-9-054
R1021	22ohm, 5%, 1/6W Carbon Film	013-176-9-220
R1023	33ohm, 5%, Deposited Carbon	002-104-5-330
R1024	10.0kohm, 1%, 1/4W Metal Film	015-144-1-002
R1026	100kohm, 1%, 1/4W Metal Film	013-172-9-104
R1028,3011	220ohm, 5%, 1/6W Carbon Film	013-176-9-221
R1029,1064,1070,3010	1kohm, 5%, 1/6W Carbon Film	013-176-9-102
R1047	4.7ohm, 5%, 5W Metal Oxide	013-173-9-056
R1051,1065	12kohm, 5%, 1/6W Carbon Film	013-176-9-123
R1052,1056,1063,1066,2008	10kohm, 5%, 1/6W Carbon Film	013-176-9-103
R1053	4.3kohm, 5%, 1/6W Carbon Film	013-176-9-432
R1054,1060,3013	47kohm, 5%, 1/6W Carbon Film	013-176-9-473
R1055,1067	680ohm, 5%, 1/6W Carbon Film	013-176-9-681
R1057,1076,3009	22kohm, 5%, 1/6W Carbon Film	013-176-9-223
R1058	2Megohm, 5%, Deposited Carbon	002-104-5-205
R1059	300ohm, 5%, 1/6W Carbon Film	013-176-9-301
R1061,2020	1Megohm, 5%, 1/6W Carbon Film	013-176-9-105
R1062	56kohm, 5%, 1/6W Carbon Film	013-176-9-563
R1068	160kohm, 5%, 1/6W Carbon Film	013-176-9-164
R1069	82kohm, 5%, 1/6W Carbon Film	013-176-9-823
R1072	2kohm, 5%, Deposited Carbon	002-104-5-202
R1073	150ohm, 5%, 1/6W Carbon Film	013-176-9-151
R1075	3.3kohm, 5%, Deposited Carbon	002-104-5-332
R1077,2019	220kohm, 5%, 1/6W Carbon Film	013-176-9-224
R1081,3005	4.7kohm, 5%, 1/6W Carbon Film	013-176-9-472
R2001	22Megohm, 1%, 1W Metal Oxide	013-173-9-053
R2002	1Megohm, 1%, 1/4W Metal Film	013-172-9-105
R2003	160kohm, 1%, 1/4W Metal Film	013-172-9-164
R2004,2011	330kohm, 5%, 1/6W Carbon Film	013-176-9-334
R2005	2.2kohm, 5%, 1/6W Carbon Film	013-176-9-222
R2006	1.5kohm, 5%, 1/6W Carbon Film	013-176-9-152
R2009	10Megohm, 5%, 1/4W Carbon Comp.	001-104-5-106
R2010	2.2ohm, 5%, 1/6W Carbon Film	013-176-9-229
R2012,2013,2014,2015,2016, 2017	2.2Megohm, 5%, Deposited Carbon	002-104-5-225

MAXTEC INTERNATIONAL CORPORATION
PARTS LIST

MODEL: 1443 ASSY# (546-062-9-001) ISSUE A
Power Supply Z Axis Amp PCB Ass'y

CIRCUIT SYMBOL	DESCRIPTION	B&K-PRECISION PART NUMBER
R2018	680kohm, 5%, Deposited Carbon	002-104-5-684
R3001	3kohm, 5%, 1/6W Carbon Film	013-176-9-302
R3002	3.6kohm, 5%, 1/6W Carbon Film	013-176-9-362
R3003	150kohm, 5%, 1/6W Carbon Film	013-176-9-154
R3006,3007	100kohm, 1%, 1/4W Metal Film	015-144-1-003
VR1001	4.7kohm, 0.1W Trimmer Pot.	010-093-9-026
VR1051,1052	10kohm, 0.1W Trimmer Pot.	010-093-9-027
VR1053	47kohm, 0.1W Trimmer Pot.	010-093-9-028
VR2001	220kohm, 0.1W Trimmer Pot.	010-093-9-029
VR2002,2003	1Megohm, 0.15W Trimmer Pot.	010-093-9-030
	CAPACITORS	
C1001	4700uF, 20%, 35V Electrolytic	022-430-9-022
C1002,1009	10uF, 20%, 50V Electrolytic	022-430-9-014
C1003,1004,1008	0.001uF, 10%, 50V Polyester	025-312-9-019
C1005	0.0047uF, 10%, 50V Polyester	025-312-9-021
C1006,1019,1022	22uF, 20%, 25V Electrolytic	022-430-9-019
C1007	220pF, 5%, 50V Ceramic	020-457-9-085
C1010,1014,1017,1020,1021	100uF, 20%, 50V Electrolytic	022-430-9-015
C1011	0.0015uF, 10%, 50V Polyester	025-312-9-020
C1012	0.0047uF, 10%, 100V Polyester	025-312-9-024
C1013	330uF, 20%, 50V Electrolytic	022-430-9-021
C1015,1016,1018,1024,1025,)		
1027	)47uF, 20%, 25V Electrolytic	022-430-9-017
C1023,1026,2004	100uF, 20%, 25V Electrolytic	022-430-9-012
C1028,1029	12uF, 20%, 100V Electrolytic	021-089-9-013
C1030	2.2uF, 20%, 100V Electrolytic	021-089-9-011
C1031,1032	3.3uF, 20%, 200V Electrolytic	021-089-9-014
C1051,1052	470uF, 20%, 25V Electrolytic	022-430-9-013
C1053,1055,1056	0.01uF, +80/-20%, 50V Ceramic	020-457-9-089
C1054	47uF, 16V Tantalum	027-114-9-006
C1057	1uF, 20%, 50V Electrolytic	022-430-9-020
C2001	100pF, 10%, 2kV Ceramic	020-457-9-097
C2002,2009	0.1uF, 10%, 50V Polyester	025-312-9-023
C2003	0.047uF, 10%, 50V Polyester	025-312-9-022
C2005,2006,2007,2010,2011	0.0047uF, +80/-20%, 2kV Ceramic	020-457-9-098
C2008	0.001uF, 10%, 500V Ceramic	020-457-9-090
C2012	2.2uF, 20%, 160V Electrolytic	021-089-9-012
C2013,3003	0.0047uF, 10%, 500V Ceramic	020-457-9-095
C3002	0.5pF, +/-0.25pF, 500V Ceramic	020-457-9-094
C3004	0.01uF, 10%, 500V Ceramic	020-457-9-096
	INDUCTORS	
L1001	46uH Inductor	047-094-9-018
L1002,1004,1005,1006	100uH, 10% Inductor	047-094-9-015
L1003	33uH, 10% Inductor	047-094-9-014
L1007	220uH, 10% Inductor	047-094-9-016
L1008	1000uH, 10% Inductor	047-094-9-017
L2001	3.3uH, 20% Inductor	047-094-9-013
T1002	DC-DC Conv. Transformer (2-015C)	064-036-9-001

MAXTEC INTERNATIONAL CORPORATION
PARTS LIST

MODEL: 1443 ASSY# (546-062-9-001) ISSUE A
Power Supply Z Axis Amp PCB Ass'y

CIRCUIT SYMBOL	DESCRIPTION	B&K-PRECISION PART NUMBER
T2001	HiV DC-DC Conv. Transformer(2-016B)	064-036-9-002
	DIODES	
D1001	3A, 200V Diode	151-170-9-011
D1002	1A, 200V Diode	151-170-9-002
D1003,1004,1005,2002,2003,		
2004,2005	1SS83 Silicon Diode	151-084-9-001
D1006,1007,1008	1.2A, 100V Diode	151-170-9-007
D1009	10.6V, 400mW Zener Diode	152-210-9-011
D1010,1011	1A, 400V Diode	151-170-9-008
D1051	5.4V, 400mW Zener Diode	152-210-9-009
D1052,1054,1055,1056,1057,		
1058,1059,1060,3001,3002,		
3003	1SS133 Silicon Diode	151-120-9-002
D1053	13.6V, 400mW Zener Diode	152-210-9-012
D1061	LED, Red	158-119-9-006
D1062	10.3V, 400mW Zener Diode	152-210-9-010
D1063	5.2V, 400mW Zener Diode	152-210-9-007
D1064	3A, 100V Diode	151-170-9-009
D1065	5.3V, 400mW Zener Diode	152-210-9-006
D2001	5mA, 6kV Diode	151-170-9-010
D2006	7.3V, 400mW Zener Diode	152-210-9-008
	TRANSISTORS	
Q1001	2SA673AK PNP Transistor	177-128-9-002
Q1002	2SC2334 NPN Transistor	176-237-9-009
Q1003,1004,1005	2SC1212A NPN Transistor	176-237-9-008
Q1006,1007	2SC2785F NPN Transistor	176-147-9-002
Q1008	2SB834Y PNP Transistor	173-024-9-004
Q2001	2SK514H FET	182-106-9-002
Q2002	2SA1029D PNP Transistor	177-128-9-001
Q2003	2SD880Y NPN Transistor	172-082-9-001
Q2004,3004	2SC2682P NPN Transistor	176-237-9-010
Q3001	2SC641KC NPN Transistor	176-237-9-007
Q3002	2SC1907 NPN Transistor	176-174-9-001
Q3003	2SA1142P PNP Transistor	177-128-9-004
Q3005	2SA778K PNP Transistor	177-128-9-003
	INTEGRATED CIRCUITS	
IC1001	I.C., uPC1042C	307-490-9-015
IC1002,1006	I.C., LM311	307-442-9-004
IC1003,1007,1008	I.C., LM2904	307-490-9-014
IC1004	I.C., uPC4074C Quad Op-Amp	307-490-9-003
IC1005	I.C., 4011UB	308-311-9-001
	MISCELLANEOUS	
F1001,1002	2A, 250V, 5x20mm Slow Blow Fuse	198-300-2-000
	DC-DC Conv. Shield Case	256-308-9-001
	Cover, DC-DC Conv. Shield Case	256-308-9-002
NE2001,2002	NE-2 Neon Lamp	401-002-9-003

MAXTEC INTERNATIONAL CORPORATION
PARTS LIST

MODEL: 1443 ASSY# (546-062-9-001) ISSUE A

Power Supply Z Axis Amp PCB Ass'y

CIRCUIT SYMBOL	DESCRIPTION	B&K-PRECISION PART NUMBER
for F1001,1002	Fuse Clip	741-226-9-001
CN1006,1007,1009,1012,	3 Pin PCB Connector	757-202-9-002
CN2001,2003,3001	3 Pin PCB Connector	757-202-9-002
CN1011	4 Pin PCB Connector	757-202-9-003
CN1008,1010	5 Pin PCB Connector	757-202-9-004
CN1003	2 Pin PCB Connector (Large)	757-203-9-001
CN1004	4 Pin PCB Connector (Large)	757-203-9-003

MAXTEC INTERNATIONAL CORPORATION
PARTS LIST

MODEL: 1443 ASSY# (546-062-9-002) ISSUE A

NOTES: (1) THIS ISSUE A ASS'Y FIRST USE STARTS WITH SERIAL # 226-00121
(2) * INDICATES NOMINAL VALUE SHOWN FOR A FACTORY SELECT PART

Vertical Pre-amp PCB Ass'y

CIRCUIT SYMBOL	DESCRIPTION	B&K-PRECISION PART NUMBER
	RESISTORS	
R2,11,17,22,33,64,83,102, 111,117,122,133,164,183	100ohm, 5%, 1/6W Carbon Film	013-176-9-101
R3,52,60,63,94,103,152, 160,163,192,266,267	22ohm, 5%, 1/6W Carbon Film	013-176-9-220
R4,104	900kohm, 1%, 1/4W Metal Film	013-173-9-050
R5,105	111kohm, 1%, 1/4W Metal Film	013-173-9-049
R6,106	18ohm, 5%, 1/6W Carbon Film	013-176-9-180
R7,28,90,107,128,190,271, 272	10ohm, 5%, 1/6W Carbon Film	013-176-9-100
R8,108	990kohm, 1%, 1/4W Metal Film	013-173-9-051
R9,109	10.1kohm, 1%, 1/4W Metal Film	013-173-9-048
R12,13,112,113	500kohm, 1%, 1/4W Metal Film	013-173-9-047
R14,114	10Megohm, 5%, 1/4W Carbon Comp.	001-104-5-106
R15,16,69,91,115,116,171, 172,191,262,263,270	47ohm, 5%, 1/6W Carbon Film	013-176-9-470
R18,19,118,119,207	100kohm, 5%, 1/6W Carbon Film	013-176-9-104
R20,120	5.6kohm, 1%, 1/4W Metal Film	013-172-9-562
R21,121	3.9kohm, 1%, 1/4W Metal Film	013-172-9-392
R23,123	22kohm, 5%, 1/6W Carbon Film	013-176-9-223
R24,124	4.02kohm, 1%, 1/4W Metal Film	013-173-9-040
R25,125	4.7kohm, 5%, 1/6W Carbon Film	013-176-9-472
R26,126	470ohm, 1%, 1/4W Metal Film	013-172-9-471
R27,41,43,81,127,141,143, 181,216,219,221	220ohm, 5%, 1/6W Carbon Film	013-176-9-221
R29,129	604ohm, 1%, 1/4W Metal Film	013-173-9-039
R31,131	60.4ohm, 1%, 1/4W Metal Film	013-173-9-038
R32,132,209,210	560ohm, 1%, 1/4W Metal Film	013-172-9-561
R34,134,255,260,261	680ohm, 5%, 1/6W Carbon Film	013-176-9-681
R35,135	16kohm, 1%, 1/4W Metal Film	013-173-9-045
R36,136	80kohm, 1%, 1/4W Metal Film	013-173-9-046
R37,137	820ohm, 5%, 1/6W Carbon Film	013-176-9-821
R38,39,138,139	10ohm, 5%, 1/4W Carbon Film	013-173-9-037
R40,140	1.2kohm, 5%, 1/6W Carbon Film	013-176-9-122
R42,142	390ohm, 5%, 1/6W Carbon Film	013-176-9-391
R44,46,144,146	150ohm, 1%, 1/4W Metal Film	015-144-1-500
R45,145	300ohm, 1%, 1/4W Metal Film	013-173-9-044
R47,147	37.4ohm, 1%, 1/4W Metal Film	015-144-3-748
R48,148	90ohm, 1%, 1/4W Metal Film	013-173-9-043
R49,149	100ohm, 1%, 1/4W Metal Film	015-144-1-000
R50,150	60ohm, 1%, 1/4W Metal Film	013-173-9-042
R51,54,82,151,154,182, 218,220	10kohm, 5%, 1/6W Carbon Film	013-176-9-103
R53,153	6.8kohm, 5%, 1/6W Carbon Film	013-176-9-682
R55,155	68ohm, 5%, 1/6W Carbon Film	013-176-9-680
R56,156,258	330ohm, 5%, 1/6W Carbon Film	013-176-9-331
R57,157	56ohm, 5%, 1/6W Carbon Film	013-176-9-560

MAXTEC INTERNATIONAL CORPORATION
PARTS LIST

MODEL: 1443 ASSY# (546-062-9-002) ISSUE A
NOTES: (1) THIS ISSUE A ASS'Y FIRST USE STARTS WITH SERIAL # 226-00121
(2) * INDICATES NOMINAL VALUE SHOWN FOR A FACTORY SELECT PART

Vertical Pre-amp PCB Ass'y

CIRCUIT SYMBOL	DESCRIPTION	B&K-PRECISION PART NUMBER
R58,59,158,159,201,202	4.7kohm, 1%, 1/4W Metal Film	013-172-9-472
R61,62,161,162	1.8kohm, 5%, 1/6W Carbon Film	013-176-9-182
R65,66,165,166	680ohm, 1%, 1/4W Metal Film	013-172-9-681
R67,167,168,213,214,256, 257,268	2.2kohm, 1%, 1/4W Metal Film	013-172-9-222
R68,169,170,269	3.3kohm, 1%, 1/4W Metal Film	013-172-9-332
R70*,173*	470 - 1.5k ohm,5%,1/6W Carbon Film	-NONE-
R84,184	3.9kohm, 5%, 1/6W Carbon Film	013-176-9-392
R85,185	6.8kohm, 1%, 1/4W Metal Film	013-172-9-682
R86,186	200ohm, 1%, 1/4W Metal Film	013-172-9-201
R88,188	1.8kohm, 1%, 1/4W Metal Film	013-172-9-182
R89,189	1.5kohm, 5%, 1/6W Carbon Film	013-176-9-152
R92	560ohm, 5%, 1/6W Carbon Film	013-176-9-561
R93	3.3kohm, 5%, 1/6W Carbon Film	013-176-9-332
R203,204	150ohm, 1%, 1/4W Metal Film	013-172-9-151
R205,206	270ohm, 1%, 1/4W Metal Film	013-172-9-271
R208,251,252,253	1kohm, 5%, 1/6W Carbon Film	013-176-9-102
R211,212	82ohm, 5%, 1/6W Carbon Film	013-176-9-820
R215	150ohm, 5%, 1/6W Carbon Film	013-176-9-151
R217	36kohm, 5%, 1/6W Carbon Film	013-176-9-363
R254	8.2kohm, 5%, 1/6W Carbon Film	013-176-9-822
R264,265	390ohm, 1%, 1/4W Metal Film	013-172-9-391
RA201	Resistor Network	012-054-9-001
VR1,5,101,105	47kohm, 0.1W Trimmer Pot.	010-093-9-028
VR2,102	1kohm, 0.1W Trimmer Pot.	010-093-9-025
VR4/S4,VR104/S104	10kohm Potentiometer with Switch	008-910-9-016
VR6,106	100ohm, 0.1W Trimmer Pot.	010-093-9-023
VR81,181	4.7kohm, 0.1W Trimmer Pot.	010-093-9-026
VR251	10kohm, 0.1W Trimmer Pot.	010-093-9-027
VR252	470ohm, 0.1W Trimmer Pot.	010-093-9-024
	CAPACITORS	
C2,83,102,183,201	100pF, 5%, 50V Ceramic	020-457-9-083
C3,103	33pF, 5%, 50V Ceramic	020-457-9-080
C4,104	330pF, 10%, 50V Ceramic	020-457-9-086
C5,105	0.001uF, 10%, 500V Ceramic	020-457-9-090
C6,106	47pF, 5%, 50V Ceramic	020-457-9-081
C7,107	8pF, +/-0.25pF, 50V Ceramic	020-457-9-075
C8,85,108,186	68pF, 5%, 50V Ceramic	020-457-9-082
C9,109	0.001uF, 10%, 50V Polyester	025-312-9-017
C10,11,17,110,111,117, 211,251	0.1uF, +80/-20%, 50V Ceramic	020-457-9-091
C12,16,18,112,116,118,208	100uF, 20%, 25V Electrolytic	022-430-9-012
C13,81,88,113,181,182,203	22uF, 20%, 25V Electrolytic	022-430-9-019
C14,114,84,185	3pF, +/-0.25pF, 50V Ceramic	020-457-9-073
C19,20,119,120	10pF, +/-0.5pF, 50V Ceramic	020-457-9-076
C21,121	27pF, 5%, 50V Ceramic	020-457-9-079

MAXTEC INTERNATIONAL CORPORATION
PARTS LIST

MODEL: 1443 ASSY# (546-062-9-002) ISSUE A

NOTES: (1) THIS ISSUE A ASS'Y FIRST USE STARTS WITH SERIAL # 226-00121
(2) * INDICATES NOMINAL VALUE SHOWN FOR A FACTORY SELECT PART

Vertical Pre-amp PCB Ass'y

CIRCUIT SYMBOL	DESCRIPTION	B&K-PRECISION PART NUMBER
C22,23,29,82,87,122,123, 129,130,187,207,212,254, 260	0.01uF, +80/-20%, 50V Ceramic	020-457-9-089
C24,124	0.022uF, 10%, 50V Polyester	025-312-9-018
C26,126	22pF, 5%, 50V Ceramic	020-457-9-078
C27,28,127,128,257,258	680pF, 10%, 50V Ceramic	020-457-9-087
C86	220pF, 5%, 50V Ceramic	020-457-9-085
C89*,188*	1 - 3pF, +/-0.25pF, 50V Ceramic	-NONE-
C202	15pF, 5%, 50V Ceramic	020-457-9-077
C206	5pF, +/-0.25pF, 50V Ceramic	020-457-9-074
C209,210,261	1000pF, 10%, 50V Ceramic	020-457-9-088
C252,253	120pF, 5%, 50V Ceramic	020-457-9-084
C256,259,271,272	47uF, 20%, 25V Electrolytic	022-430-9-017
VC1,3,101,103	12pF, 250V Ceramic Trimmer	028-126-9-002
VC2,4,102,104	6pF, 250V Ceramic Trimmer	028-126-9-001
	INDUCTORS	
L1,101	0.47uH, 20% Inductor	047-094-9-012
	SWITCHES	
S1,101	Lever Switch	080-036-9-002
S2/S3/VR3,S102/S103/VR103	Rotary Switch Ass'y with Pot.	083-336-9-003
S201	Lever Switch	080-036-9-001
	DIODES	
D1,2,101,102,201,202,203, 204,205,206,207,208,209, 210,211,212,213,214	1SS133 Silicon Diode	151-120-9-002
D3,81,103,181,215	3.5V, 400mW Zener Diode	152-206-9-014
	TRANSISTORS	
Q1,101	2SK514-H FET	182-106-9-002
Q2,9,102,111	2SC535C NPN Transistor	176-055-9-001
Q3,6,7,103,106,107,108, 109,201,202	2SA1206 PNP Transistor	177-071-9-003
Q4,5,104,105	2SC3355 NPN Transistor	176-213-9-001
Q8,10,110,112,253,254	2SA1029D PNP Transistor	177-128-9-001
Q203	2SC641KC NPN Transistor	176-237-9-007
Q251,252	2SC458C NPN Transistor	176-048-9-002
	INTEGRATED CIRCUITS	
IC1,101	I.C., TL071C	307-386-9-001
IC201	I.C., 74LS74	307-119-9-001
IC202	I.C., 74LS08	307-118-9-001
	MISCELLANEOUS	
CN201	3 Pin PCB Connector	757-188-9-001

MAXTEC INTERNATIONAL CORPORATION
PARTS LIST

MODEL: 1443 ASSY# (546-062-9-002) ISSUE A
NOTES: (1) THIS ISSUE A ASS'Y FIRST USE STARTS WITH SERIAL # 226-00121
(2) * INDICATES NOMINAL VALUE SHOWN FOR A FACTORY SELECT PART

Vertical Pre-amp PCB Ass'y

CIRCUIT SYMBOL	DESCRIPTION	B&K-PRECISION PART NUMBER
CN4,102,104,253,254	2 Pin PCB Connector	757-202-9-001
CN255	3 Pin PCB Connector	757-202-9-002
CN2	4 Pin PCB Connector	757-202-9-003
CN251	5 Pin PCB Connector	757-202-9-004
CN252	6 Pin PCB Connector	757-202-9-005

MAXTEC INTERNATIONAL CORPORATION
PARTS LIST

MODEL: 1443 ASSY# (546-062-9-003) ISSUE A
Vertical Main Amp PCB Ass'y

CIRCUIT SYMBOL	DESCRIPTION	B&K-PRECISION PART NUMBER
	RESISTORS	
R301,302	91ohm, 1%, 1/4W Metal Film	013-172-9-910
R303,304	820ohm, 1%, 1/4W Metal Film	013-172-9-821
R305,340,341,342	2.2kohm, 5%, 1/6W Carbon Film	013-176-9-222
R306	39ohm, 5%, 1/6W Carbon Film	013-176-9-390
R307,343,344	100ohm, 1%, 1/4W Metal Film	013-172-9-101
R308	33kohm, 5%, 1/6W Carbon Film	013-176-9-333
R309,345	10ohm, 5%, 1/6W Carbon Film	013-176-9-100
R310,317,318,325,326,327, 328,333,334,335,336	47ohm, 5%, 1/6W Carbon Film	013-176-9-470
R311	3.3kohm, 1%, 1/4W Metal Film	013-172-9-332
R312,313	470ohm, 1%, 1/4W Metal Film	013-172-9-471
R314	100ohm, 5%, 1/6W Carbon Film	013-176-9-101
R315,316	1.8kohm, 1%, 1/4W Metal Film	013-172-9-182
R319,320,323,324	47kohm, 1%, 1/4W Metal Film	013-173-9-057
R330	470ohm, 5%, 1/6W Carbon Film	013-176-9-471
R331	15kohm, 5%, 1/6W Carbon Film	013-176-9-153
R332	68ohm, 5%, 1/6W Carbon Film	013-176-9-680
R337	47kohm, 5%, 1/6W Carbon Film	013-176-9-473
R338	220kohm, 5%, 1/6W Carbon Film	013-176-9-224
R339	470kohm, 5%, 1/6W Carbon Film	013-176-9-474
R346	3.9kohm, 5%, 1/6W Carbon Film	013-176-9-392
VR301	220ohm, 0.1W Trimmer Pot.	010-093-9-031
	CAPACITORS	
C301,302	82pF, 5%, 50V Ceramic	020-457-9-101
C304	220pF, 5%, 50V Ceramic	020-457-9-085
C305	7pF, +/-0.25pF, 50V Ceramic	020-457-9-099
C306	39pF, 10%, 50V Ceramic	020-457-9-100
C307	27pF, 5%, 50V Ceramic	020-457-9-079
C308,309,314,315	47pF, 5%, 50V Ceramic	020-457-9-081
C310,311,312,313	5pF, +/-0.25pF, 500V Ceramic	020-457-9-103
C316	0.1uF, 10%, 50V Polyester	025-312-9-023
C317,318,320,321	0.0047uF, 10%, 500V Ceramic	020-457-9-104
C319	0.001uF, 10%, 50V Polyester	025-312-9-019
C322	2.2uF, 20%, 100V Electrolytic	021-089-9-011
C323,324,325	100uF, 20%, 25V Electrolytic	022-430-9-012
C326	1pF, +/-0.25pF, 500V Ceramic	020-457-9-102
VC301,302,303	20pF, 250V Ceramic Trimmer	028-126-9-003
	INDUCTORS	
L303	100uH, 10%	047-094-9-001
	DIODES	
D301	5.3V, 400mW Zener Diode	152-210-9-006
D302,303	1SS133 Silicon Diode	151-120-9-002
	TRANSISTORS	
Q301,302,309,310	2SA1206 PNP Transistor	177-071-9-003
Q303,304	2SC1907 NPN Transistor	176-174-9-001

MAXTEC INTERNATIONAL CORPORATION
PARTS LIST

MODEL: 1443 ASSY# (546-062-9-003) ISSUE A

Vertical Main Amp PCB Ass'y

CIRCUIT SYMBOL	DESCRIPTION	B&K-PRECISION PART NUMBER
Q305,306	2SC2682P NPN Transistor	176-237-9-010
Q307,308	2SA1142P PNP Transistor	177-128-9-004
Q311	2SC1890 NPN Transistor	176-237-9-012
Q312	2SA1005L PNP Transistor	177-128-9-005
	MISCELLANEOUS	
	Heat Sink	747-176-9-007
CN301	3 Pin PCB Connector	757-190-9-001
CN303	5 Pin PCB Connector	757-202-9-004
CN302	4 Pin, 90° PCB Connector	757-204-9-003

MAXTEC INTERNATIONAL CORPORATION
PARTS LIST

MODEL: 1443 ASSY# (546-062-9-004) ISSUE A
NONE: * AT INDICATES NOMINAL VALUE FOR A FACTORY SELECT PART
Trigger Sweep Generator PCB Ass'y

CIRCUIT SYMBOL	DESCRIPTION	B&K-PRECISION PART NUMBER
	RESISTORS	
R401,404,420,421,423,636, 641	10kohm, 5%, 1/6W Carbon Film	013-176-9-103
R402,433,603,604,637	47kohm, 5%, 1/6W Carbon Film	013-176-9-473
R403,619	1.00Megohm, 1%, 1/4W Metal Film	015-144-1-004
R405,809	33ohm, 5%, 1/6W Carbon Film	013-176-9-330
R406,412,413,608,635	1.2kohm, 5%, 1/6W Carbon Film	013-176-9-122
R407,408	560ohm, 5%, 1/6W Carbon Film	013-176-9-561
R409	68ohm, 5%, 1/6W Carbon Film	013-176-9-680
R410,411	2.7kohm, 5%, 1/6W Carbon Film	013-176-9-272
R414,415	220ohm, 5%, 1/6W Carbon Film	013-176-9-221
R416,417,606,805,810,811, 814,815	47ohm, 5%, 1/6W Carbon Film	013-176-9-470
R418,632,812,813	2.2kohm, 5%, 1/6W Carbon Film	013-176-9-222
R419	6.2kohm, 5%, 1/6W Carbon Film	013-176-9-622
R422	470ohm, 5%, 1/6W Carbon Film	013-176-9-471
R424,432,605,628,643	1kohm, 5%, 1/6W Carbon Film	013-176-9-102
R425,426	470kohm, 5%, 1/6W Carbon Film	013-176-9-474
R427	390ohm, 5%, 1/6W Carbon Film	013-176-9-391
R428,430,609	100ohm, 5%, 1/6W Carbon Film	013-176-9-101
R429	270ohm, 5%, 1/6W Carbon Film	013-176-9-271
R431	6.8kohm, 5%, 1/6W Carbon Film	013-176-9-682
R434,601,657	330ohm, 5%, 1/6W Carbon Film	013-176-9-331
R602,614	22ohm, 5%, 1/6W Carbon Film	013-176-9-220
R607,625,629,638,4004	5.6kohm, 5%, 1/6W Carbon Film	013-176-9-562
R612	13.0kohm, 1%, 1/4W Metal Film	015-144-1-302
R613	1.5kohm, 1%, 1/4W Metal Film	013-172-9-152
R615,616,622	100kohm, 1%, 1/4W Metal Film	015-144-1-003
R617,665	300kohm, 1%, 1/4W Metal Film	013-173-9-060
R618	500kohm, 1%, 1/4W Metal Film	013-173-9-047
R620	3Megohm, 1%, 1/4W Metal Film	013-173-9-061
R621,633	36kohm, 5%, 1/6W Carbon Film	013-176-9-363
R623	27kohm, 5%, 1/6W Carbon Film	013-176-9-273
R624	18kohm, 5%, 1/6W Carbon Film	013-176-9-183
R626,651,652,654,655,4002	100kohm, 5%, 1/6W Carbon Film	013-176-9-104
R627	3.6kohm, 1%, 1/4W Metal Film	013-172-9-362
R630	3.3kohm, 1%, 1/4W Metal Film	013-172-9-332
R631	2.4kohm, 1%, 1/4W Metal Film	013-172-9-242
R634	3.9kohm, 5%, 1/6W Carbon Film	013-176-9-392
R639	18kohm, 1%, 1/4W Metal Film	013-172-9-183
R640	27kohm, 1%, 1/4W Metal Film	013-172-9-273
R644	3.3kohm, 5%, 1/6W Carbon Film	013-176-9-332
R645	56kohm, 5%, 1/6W Carbon Film	013-176-9-563
R653	22kohm, 5%, 1/6W Carbon Film	013-176-9-223
R656	12kohm, 5%, 1/6W Carbon Film	013-176-9-123
R658	10kohm, 1%, 1/4W Metal Film	013-172-9-103
R661	5.1kohm, 5%, 1/6W Carbon Film	013-176-9-512
R662	10kohm, 5%, 1/4W Carbon Film	002-104-5-103
R663	20kohm, 5%, 1/4W Carbon Film	002-104-5-203

MAXTEC INTERNATIONAL CORPORATION
PARTS LIST

MODEL: 1443 ASSY# (546-062-9-004) ISSUE A
NONE: * AT INDICATES NOMINAL VALUE FOR A FACTORY SELECT PART
Trigger Sweep Generator PCB Ass'y

CIRCUIT SYMBOL	DESCRIPTION	B&K-PRECISION PART NUMBER
R664	2.00Megohm, 1%, 1/4W Metal FilM	015-144-2-004
R666*	160 - 300ohm, 1%, 1/4W Metal Film	-NONE-
R801	15kohm, 5%, 1/6W Carbon Film	013-176-9-153
R801,804,806	1.2kohm, 1%, 1/4W Metal Film	013-172-9-122
R803	5.6kohm, 1%, 1/4W Metal Film	013-172-9-562
R805	47ohm, 5%, 1/4W Carbon Film	002-104-5-470
R807,808	1.5kohm, 5%, 1/6W Carbon Film	013-176-9-152
R4001	24kohm, 5%, 1/6W Carbon Film	013-176-9-243
R4003	4.7kohm, 5%, 1/6W Carbon Film	013-176-9-472
R4005	330kohm, 5%, 1/6W Carbon Film	013-176-9-334
R4006*	4.7k or 10kohm, 5%, 1/4W Dep.Carbon	-NONE-
RA601	Resistor Network	012-054-9-004
RA602	Resistor Network	012-054-9-001
VR401	2.2kohm, 0.1W Trimmer Pot.	010-093-9-036
VR602,4002	4.7kohm, 0.1W Trimmer Pot.	010-093-9-026
VR603,4001	100kohm, 0.1W Trimmer Pot.	010-093-9-037
VR604	10kohm, 0.1W Trimmer Pot.	010-093-9-027
	CAPACITORS	
C401	0.022uF,10%, 100V Polyester	025-312-9-025
C402,601,613,4001	47pF, 5%, 50V Ceramic	020-457-9-081
C403,408,413,416,417,610,	)	
615,616,617,671,674,675,	)	
801	)22uF, 20%, 25V Electrolytic	022-430-9-019
C404,609,614,651	22pF, 5%, 50V Ceramic	020-457-9-078
C405,652	100pF, 5%, 50V Ceramic	020-457-9-083
C406,407	0.0015uF, 10%, 50V Ceramic	020-457-9-108
C409,410,415,612,661,662,	)	
C663,664	)0.01uF, +80/-20%, 50V Ceramic	020-457-9-089
C411	1uF, 35V Tantalum	027-114-9-007
C412	3pF, +/-0.25pF, 50V Ceramic	020-457-9-073
C601,611,673	47uF, 20%, 25V Electrolytic	022-430-9-017
C603	10uF, 20%, 50V Electrolytic	022-430-9-014
C604	1uF, 5%, 63V Polyester	025-312-9-027
C605	0.01uF, 5%, 50V Polyester	025-312-9-026
C606	82pF, 5%, 50V Ceramic	020-457-9-101
C607	27pF, 5%, 50V Ceramic	020-457-9-079
C618*	0.047uF, 10%, 50V Polyester	025-312-9-030
C618*	0.022uF, 10%, 50V Polyester	025-312-9-029
C672	220uF, 20%, 25V Electrolytic	022-430-9-018
C802	100uF, 20%, 25V Electrolytic	022-430-9-012
C4002	0.0047uF,10%, 50V Polyester	025-312-9-021
VC601,602	20pF, 250V Ceramic Trimmer	028-126-9-004
	INDUCTORS	
L601	1000uH, 10%	047-094-9-017
L602	100uH, 10%	047-094-9-001

MAXTEC INTERNATIONAL CORPORATION
PARTS LIST

MODEL: 1443 ASSY# (546-062-9-004) ISSUE A
NONE: * AT INDICATES NOMINAL VALUE FOR A FACTORY SELECT PART
Trigger Sweep Generator PCB Ass'y

CIRCUIT SYMBOL	DESCRIPTION	B&K-PRECISION PART NUMBER
	SWITCHES	
S401	Lever Switch	080-036-9-002
S402	Lever Switch	080-036-9-001
S601	Rotary Switch	083-336-9-004
S603	Lever Switch	080-036-9-003
	DIODES	
D401,402,403,404,406,601,	)	
603,605,606,607,608,609,	)	
610,611,612,613,614,615,	)	
651,652	)1SS133 Silicon Diode	151-120-9-002
D405,602	1SS228 Silicon Diode	151-170-9-013
D604	2.6V, 500mW Zener Diode	152-210-9-014
	TRANSISTORS	
Q401,406,606	2SK117BL FET	182-101-9-001
Q402,403,409,601,612	2SC1907 NPN Transistor	176-174-9-001
Q404,405,408	2SA1005L PNP Transistor	177-128-9-005
Q407	2SA1175F PNP Transistor	177-063-9-003
Q602,603,604,605,608,609	2SA844D PNP Transistor	177-021-9-001
Q610,611,613	2SC2785F NPN Transistor	176-147-9-002
Q614	2SC641KC NPN Transistor	176-237-9-007
Q801,802	2SC458C NPN Transistor	176-048-9-002
Q803,804	2SA1029D PNP Transistor	177-128-9-001
	INTEGRATED CIRCUITS	
IC401	I.C., 74F00	307-259-9-022
IC601	I.C., 74LS112	307-490-9-017
IC602	I.C., 4053B	308-375-9-003
IC603	I.C., 4011UB	308-311-9-001
IC604	I.C., 4572UB	308-459-9-006
IC605	I.C., 78L05 Regulator	307-129-9-001
	MISCELLANEOUS	
CN402,602,603,4001	2 Pin PCB Connector	757-202-9-001
CN601,604,802	3 Pin PCB Connector	757-202-9-002
CN401	4 Pin PCB Connector	757-202-9-003
CN801	5 Pin PCB Connector	757-202-9-004
CN403	6 Pin PCB Connector	757-202-9-005
CN605	7 Pin PCB Connector	757-202-9-006

MAXTEC INTERNATIONAL CORPORATION
PARTS LIST

MODEL: 1443 ASSY# (546-062-9-005) ISSUE A

Horizontal Main Amp PCB Ass'y

CIRCUIT SYMBOL	DESCRIPTION	B&K-PRECISION PART NUMBER
	RESISTORS	
R820,844	6.8kohm, 1%, 1/4W Metal Film	013-172-9-682
R821,822	8.06kohm, 1%, 1/4W Metal Film	013-173-9-058
R823	6.8kohm, 5%, 1/6W Carbon Film	013-176-9-682
R823,829	4.7kohm, 1%, 1/4W Metal Film	013-172-9-472
R825,831,840,862,863	15kohm, 5%, 1/6W Carbon Film	013-176-9-153
R826,832	3kohm, 5%, 1/6W Carbon Film	013-176-9-302
R827,867,868	220ohm, 5%, 1/6W Carbon Film	013-176-9-221
R833	3.6kohm, 5%, 1/6W Carbon Film	013-176-9-362
R834	1.8kohm, 5%, 1/6W Carbon Film	013-176-9-182
R835	100ohm, 5%, 1/6W Carbon Film	013-176-9-101
R836	2.7kohm, 5%, 1/6W Carbon Film	013-176-9-272
R837	4.7kohm, 5%, 1/6W Carbon Film	013-176-9-472
R838	5.6kohm, 5%, 1/6W Carbon Film	013-176-9-562
R839	560ohm, 5%, 1/6W Carbon Film	013-176-9-561
R842,843	3.9kohm, 1%, 1/4W Metal Film	013-172-9-392
R845	1kohm, 5%, 1/6W Carbon Film	013-176-9-102
R846,854,855	3.3kohm, 5%, 1/6W Carbon Film	013-176-9-332
R847	33kohm, 5%, 1/6W Carbon Film	013-176-9-333
R849,850	4.3kohm, 1%, 1/4W Metal Film	013-172-9-432
R851	2kohm, 5%, 1/6W Carbon Film	013-176-9-202
R852,853	47ohm, 5%, 1/6W Carbon Film	013-176-9-470
R856,858	180kohm, 1%, 1/4W Metal Film	013-173-9-059
R857,859	200kohm, 1%, 1/4W Metal Film	015-144-2-003
R860,861	330kohm, 5%, 1/6W Carbon Film	013-176-9-334
R864,865	1.5kohm, 5%, 1/6W Carbon Film	013-176-9-152
R866,867	6.8ohm, 5%, 1/6W Carbon Film	013-176-9-689
R872	470kohm, 5%, 1/6W Carbon Film	013-176-9-474
R873	510kohm, 5%, 1/6W Carbon Film	013-176-9-514
VR804	2.2kohm, 0.1W Trimmer Pot.	010-093-9-033
VR805	220ohm, 0.1W Trimmer Pot.	010-093-9-032
VR806	10kohm, 0.1W Trimmer Pot.	010-093-9-034
VR807	22kohm, 0.1W Trimmer Pot.	010-093-9-035
	CAPACITORS	
C806	100pF, 5%, 50V Ceramic	020-457-9-083
C807	15pF, 5%, 50V Ceramic	020-457-9-077
C808	330pF, 10%, 50V Ceramic	020-457-9-086
C809	0.001uF, 10%, 50V Ceramic	020-457-9-088
C810	1uF, 20%, 50V Electrolytic	022-430-9-020
C813	2.2uF, 20%, 100V Electrolytic	021-089-9-011
C815,816	0.5pF, +/-0.25pF, 500V Ceramic	020-457-9-094
C816,821	2.2uF, 20%, 160V Electrolytic	021-089-9-012
C817,818	0.01uF, 10%, 500V Ceramic	020-457-9-105
C820,822,825,826	0.0047uF, 10%, 500V Ceramic	020-457-9-095
C823,824	22uF, 20%, 25V Electrolytic	022-430-9-019
	INDUCTORS	
L801,802	100uH, 10%	047-094-9-001

MAXTEC INTERNATIONAL CORPORATION
PARTS LIST

MODEL: 1443 ASSY# (546-062-9-005) ISSUE A

Horizontal Main Amp PCB Ass'y

CIRCUIT SYMBOL	DESCRIPTION	B&K-PRECISION PART NUMBER
	DIODES	
D803,804,807,808	30mA, 15V Diode	151-170-9-012
D805,806,810,811	1SS133 Silicon Diode	151-120-9-002
D809	6.4V, 400mW Zener Diode	152-210-9-013
	TRANSISTORS	
Q806,807,808,809,810,811, 812,813,814,815,816	2SA1029D PNP Transistor	177-128-9-001
Q817,818	2SC2682P NPN Transistor	176-237-9-010
Q819,820	2SA1142P PNP Transistor	177-128-9-004
	MISCELLANEOUS	
CN803,804	3 Pin PCB Connector	757-202-9-002
CN805,806	4 Pin PCB Connector	757-202-9-003
CN807	5 Pin PCB Connector	757-202-9-004

MAXTEC INTERNATIONAL CORPORATION
PARTS LIST

MODEL: 1443 ASSY# (546-062-9-006) ISSUE A

Power Switch/Intensity Control PCB Ass'y

CIRCUIT SYMBOL	DESCRIPTION	B&K-PRECISION PART NUMBER
	RESISTORS	
R3014	4.7kohm, 5%, 1/6W Carbon Film	013-176-9-472
R3015	2.2kohm, 5%, 1/6W Carbon Film	013-176-9-222
VR3001/S1001	10kohm Potentiometer with/Switch	008-910-9-017
VR3002ab	10kohm/50kohm Dual Potentiometer	008-910-9-018
	CAPACITORS	
C2020,2021	0.01uF, +80/-20%, 50V Ceramic	020-457-9-089
	DIODES	
D1041	LED, Green	158-119-9-007
D1048	LED, Red	158-119-9-006
	TRANSISTORS	
Q2005	2SC2785F NPN Transistor	176-147-9-002
Q2006	2SA1175F PNP Transistor	177-063-9-003
	MISCELLANEOUS	
CN2004	2 Pin PCB Connector	757-202-9-001
CN1016	3 Pin PCB Connector	757-202-9-002
CN3002	5 Pin PCB Connector	757-202-9-004

MAXTEC INTERNATIONAL CORPORATION
PARTS LIST

MODEL: 1443 ASSY# (546-062-9-007) ISSUE A

High Voltage Ass'y

CIRCUIT SYMBOL	DESCRIPTION	B&K-PRECISION PART NUMBER
	CAPACITORS	
C2014,2015,2016,2017,2018, 2019,2020	0.001uF, 10%, 6.3kV Ceramic	020-457-9-107
	DIODES	
D2007,2008,2009,2010,2011, 2012,2013	6000V, 5mA Diode	151-170-9-010
	MISCELLANEOUS	
	Anode Cap wire assembly	428-234-9-001

MAXTEC INTERNATIONAL CORPORATION
PARTS LIST

MODEL: 1443 ASSY# (546-062-9-008) ISSUE A

Attenuator Status PCB Ass'ys (2 half's per unit)

CIRCUIT SYMBOL	DESCRIPTION	B&K-PRECISION PART NUMBER
	RESISTORS	
RA1,101	Resistor Network	012-054-9-001
	CAPACITORS	
C30,31,130,131	0.01uF, +80/-20%, 50v Ceramic	020-457-9-089
	MISCELLANEOUS	
CN3,103	3 Pin PCB Connector	757-202-9-002

MAXTEC INTERNATIONAL CORPORATION
PARTS LIST

MODEL: 1443 ASSY# (546-062-9-009) ISSUES A

Read Out Character Generator PCB Ass'y

CIRCUIT SYMBOL	DESCRIPTION	B&K-PRECISION PART NUMBER
	RESISTORS	
R5001	1Megohm, 5%, 1/6W Carbon Film	013-176-9-105
R5002,5003,5043	47kohm, 5%, 1/6W Carbon Film	013-176-9-473
R5004,5005,5007,5008,5030,)		
5049,5054	)10kohm, 5%, 1/6W Carbon Film	013-176-9-103
R5006,5014,5015,5016,5017,)		
5040,5056	)100kohm, 5%, 1/6W Carbon Film	013-176-9-104
R5009,5010,5011,5012,5013,)		
5044,5052	)820ohm, 5%, 1/6W Carbon Film	013-176-9-821
R5018,5021	22kohm, 1%, 1/4W Metal Film	013-172-9-223
R5019	33kohm, 1%, 1/4W Metal Film	013-172-9-333
R5020	3.6kohm, 1%, 1/4W Metal Film	013-172-9-362
R5022	4.3kohm, 1%, 1/4W Metal Film	013-172-9-432
R5023	39kohm, 1%, 1/4W Metal Film	013-172-9-393
R5024	220kohm, 1%, 1/4W Metal Film	013-172-9-224
R5025,5027	4.02kohm, 1%, 1/4W Metal Film	013-173-9-040
R5026,5028	1kohm, 1%, 1/4W Metal Film	013-172-9-102
R5029,5051	2.2kohm, 5%, 1/6W Carbon Film	013-176-9-222
R5031	150ohm, 5%, 1/6W Carbon Film	013-176-9-151
R5032	100ohm, 5%, 1/6W Carbon Film	013-176-9-101
R5033,5055,5057	1kohm, 5%, 1/6W Carbon Film	013-176-9-102
R5034	680ohm, 5%, 1/6W Carbon Film	013-176-9-681
R5035,5036	10ohm, 5%, 1/6W Carbon Film	013-176-9-100
R5037,5038	470ohm, 5%, 1/6W Carbon Film	013-176-9-471
R5039	22kohm, 5%, 1/6W Carbon Film	013-176-9-223
R5041,5046	5.6kohm, 5%, 1/6W Carbon Film	013-176-9-562
R5042	4.7kohm, 5%, 1/6W Carbon Film	013-176-9-472
R5045	6.8kohm, 5%, 1/6W Carbon Film	013-176-9-682
R5047	1.5kohm, 5%, 1/6W Carbon Film	013-176-9-152
R5048	15kohm, 5%, 1/6W Carbon Film	013-176-9-153
R5050	220ohm, 5%, 1/6W Carbon Film	013-176-9-221
R5053	12kohm, 5%, 1/6W Carbon Film	013-176-9-123
R5058	3.3kohm, 5%, 1/6W Carbon Film	013-176-9-332
R5059	33ohm, 5%, 1/6W Carbon Film	013-176-9-330
R5060,5061	10kohm, 1%, 1/4W Metal Film	013-172-9-103
RA5001,5002	Resistor Network	012-054-9-002
RA5003,5004	Resistor Network	012-054-9-003
	CAPACITORS	
C5001,5002	22pF, 5%, 50v Ceramic	020-457-9-078
C5003	1uF, 20%, 50V Electrolytic	022-430-9-020
C5004,5005,5024,5025,5033,)		
5034	)47uF, 20%, 25V Electrolytic	022-430-9-017
C5006,5008	0.1uF, +80/-20%, 50v Ceramic	020-457-9-091
C5007,5017,5037	100uF, 20%, 25V Electrolytic	022-430-9-012
C5009,5010,5012,5013,5014,)		
5015,5016,5020,5021,5022,)		
5023,5031,5032,5033	)0.01uF, +80/-20%, 50v Ceramic	020-457-9-089
C5018,5019	22uF, 20%, 25V Electrolytic	022-430-9-019
C5026	0.0022uF, 10%, 50v Ceramic	020-457-9-106

MAXTEC INTERNATIONAL CORPORATION
PARTS LIST

MODEL: 1443 ASSY# (546-062-9-009) ISSUES A
Read Out Character Generator PCB Ass'y

CIRCUIT SYMBOL	DESCRIPTION	B&K-PRECISION PART NUMBER
C5027,5029	0.001uF, 10%, 50v Ceramic	020-457-9-088
C5028	10pF, +/-0.5pF, 50v Ceramic	020-457-9-076
C5030	330pF, 10%, 50v Ceramic	020-457-9-086
	INDUCTORS & FILTERS	
FL5001,5002	Filter	140-046-9-001
L5001,5002,5003	47uH, 10% Inductor	047-094-9-019
X5001	Ceramic Resonator (2MHz)	141-029-9-001
	DIODES	
D5001	3V, 400mW Zener Diode	152-206-9-014
D5002,5003,5004,5005,5006,		
5007,5008,5010	1SS133 Silicon Diode	151-120-9-002
D5009	5.4V, 400mW Zener Diode	152-210-9-009
	TRANSISTORS	
Q5001,5002	2SC2785F NPN Transistor	176-147-9-002
Q5003	2SC1627Y NPN Transistor	176-237-9-011
	INTEGRATED CIRCUITS	
IC5001	I.C.,Digital CPU	308-459-9-005
IC5002	I.C., 74HC573AP	308-459-9-003
IC5003	I.C.,Digital PROM	308-459-9-004
IC5004,5005	I.C., 74HC563AP	308-459-9-002
IC5006,5008	I.C., TL072CP	307-480-9-001
IC5007	I.C., 4052B	308-434-9-001
IC5009	I.C., 40H000P	308-459-9-001
IC5010	I.C., 74HC00P	308-385-9-015
IC5011	I.C., 74HC04P	308-385-9-009
IC5012	I.C., LM311	307-442-9-001
IC5013	I.C., TL431CLP	307-490-9-016
	MISCELLANEOUS	
CN5004,5005,5006,5008,	4 Pin PCB Connector	757-202-9-003
CN5009,5010	4 Pin PCB Connector	757-202-9-003
CN5007	5 Pin PCB Connector	757-202-9-004
CN5002,5003	6 Pin PCB Connector	757-202-9-005
CN5001	7 Pin PCB Connector	757-202-9-006

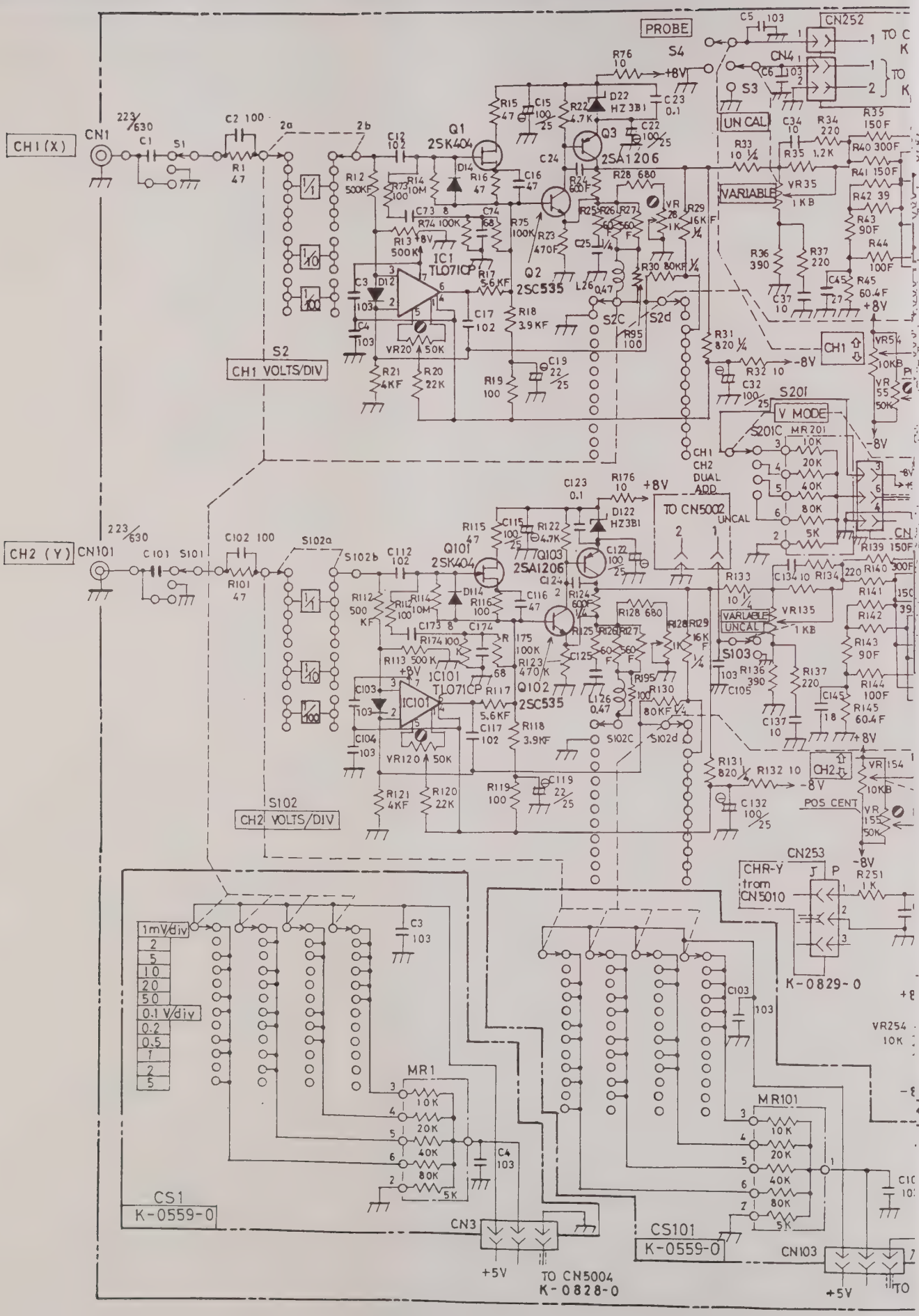
CH1 (X)
CN1
CH2 (Y)
CN101
PROBE
S4
S3
CN252
CN4
UN CAL
VARIABLE
VR35
1KB
S2
CH1 VOLTS/DIV
S102
CH2 VOLTS/DIV
Q1
2SK404
Q2
2SC535
Q3
2SA1206
IC1
TL071CP
Q101
Q102
Q103
IC101
S201
V MODE
CH1
CH2
DUAL
ADD
TO CN5002
S103
CN253
CHR-Y
from
CN5010
K-0829-0
POS CENT
1mV/div
0.1 V/div
MR1
MR101
CS1
K-0559-0
CS101
K-0559-0
CN3
+5V
TO CN5004
K-0828-0
CN103
+5V

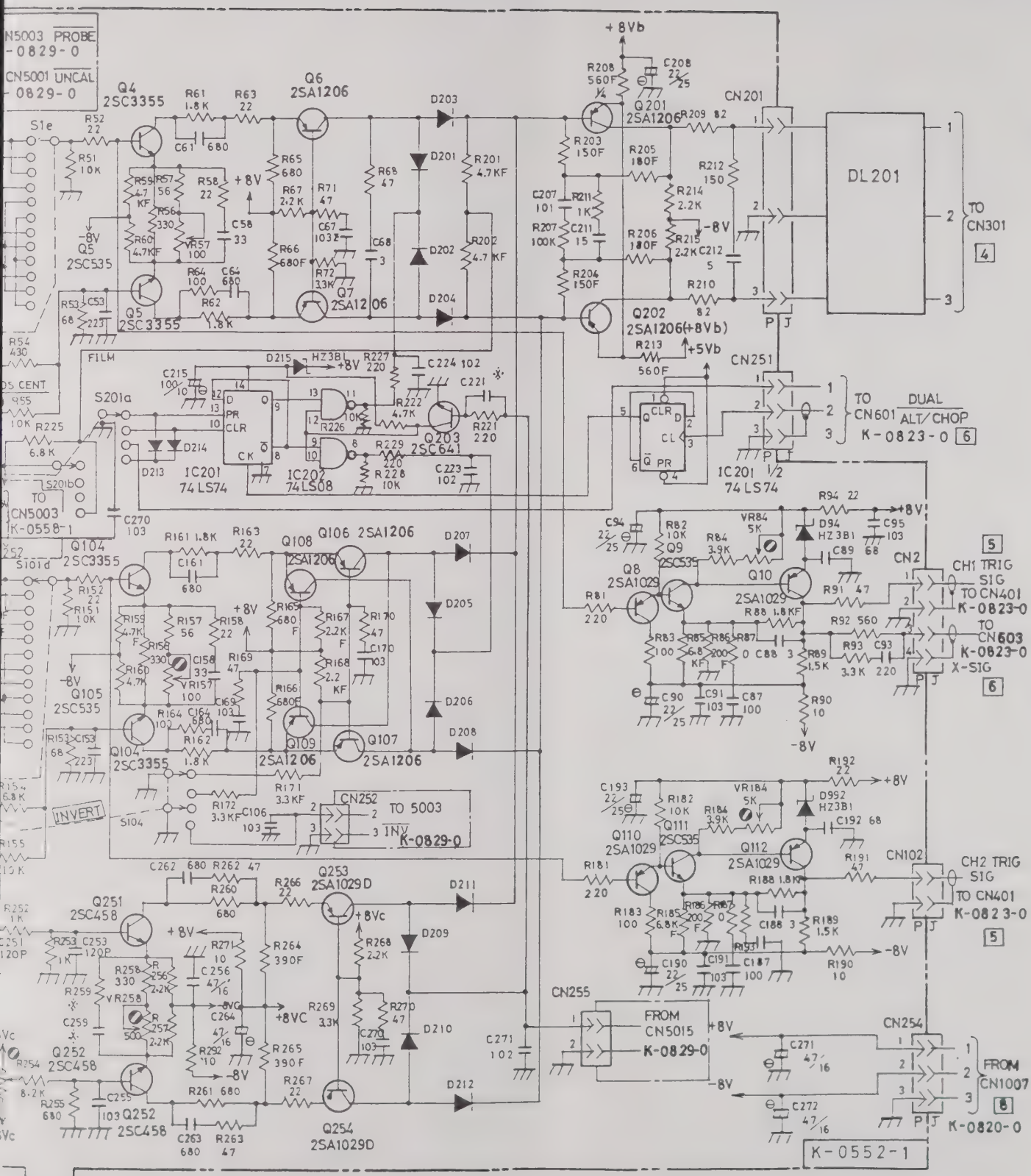

SERIAL NO.
226-00001
thru
226-00030

SCHEMATIC DIAGRAM 1443

K-0552-1, K-0559-0

VERTICAL PRE-AMP

1

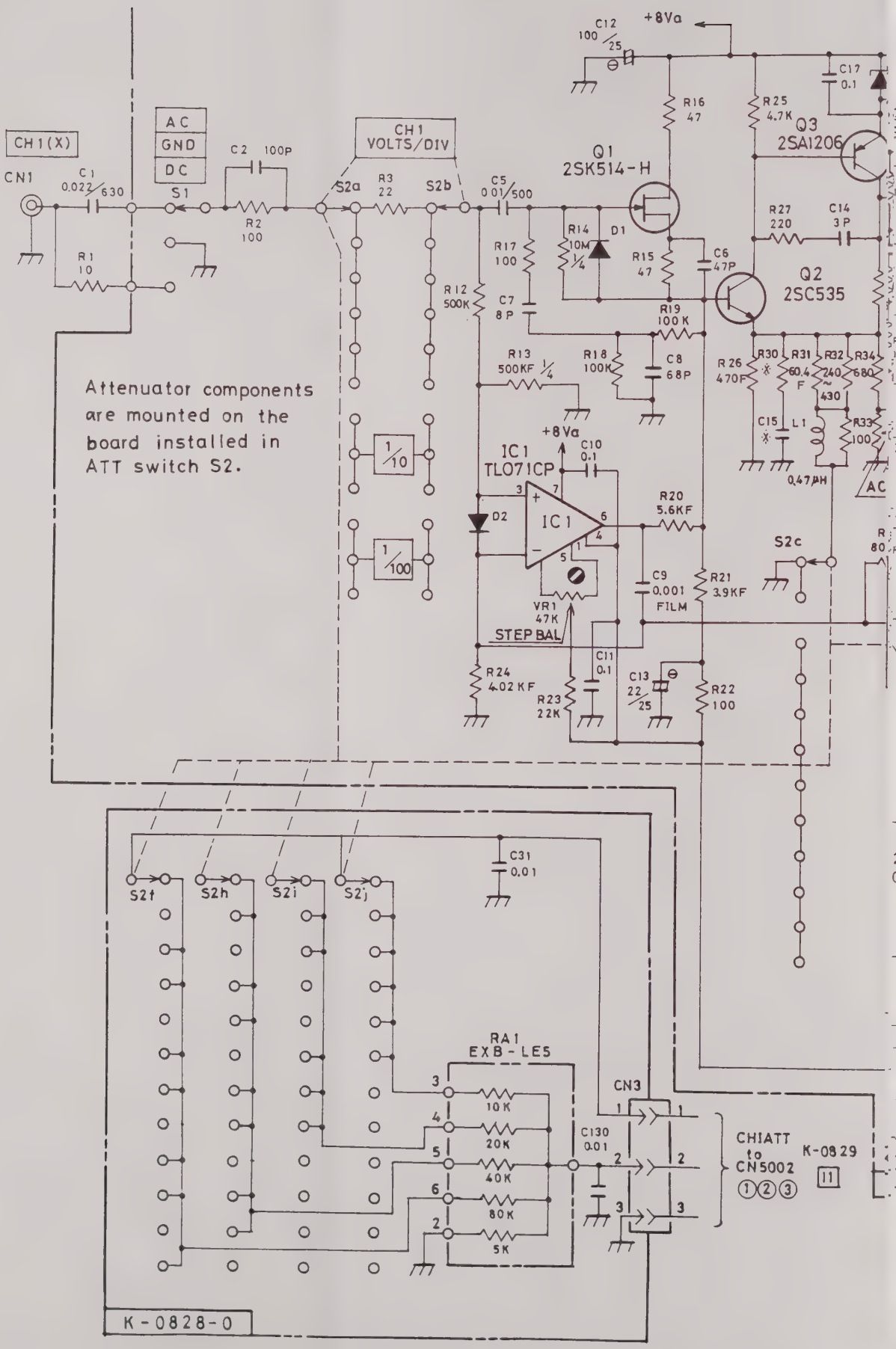
CH1(X)
CN1
C1 0.022/630
R1 10
AC
GND
DC
S1
C2 100P
R2 100
CH1 VOLTS/DIV
S2a
R3 22
S2b
C5 0.01/500
R12 500K
C7 8P
R17 100
R14 10M 1/4
D1
R15 47
C6 47P
Q1 2SK514-H
R16 47
C12 100/25
+8Va
R25 4.7K
Q3 2SA1206
C17 0.1
R27 220
C14 3P
Q2 2SC535
R19 100K
R18 100K
C8 68P
R13 500KF 1/4
R26 470F
R30
R31 60.4 F
R32 240~430
R34 680
C15
L1 0.47μH
R33 100
AC
Attenuator components are mounted on the board installed in ATT switch S2.
1/10
1/100
IC1 TLO71CP
C10 0.1
D2
R20 5.6KF
S2c
C9 0.001 FILM
R21 3.9KF
VR1 47K
STEP BAL
C11 0.1
R24 4.02KF
R23 22K
C13 22/25
R22 100
C31 0.01
S2f
S2h
S2i
S2j
RA1 EXB-LE5
10K
20K
40K
80K
5K
C130 0.01
CN3
CHIATT to CN5002 ①②③
K-0829
11
K-0828-0

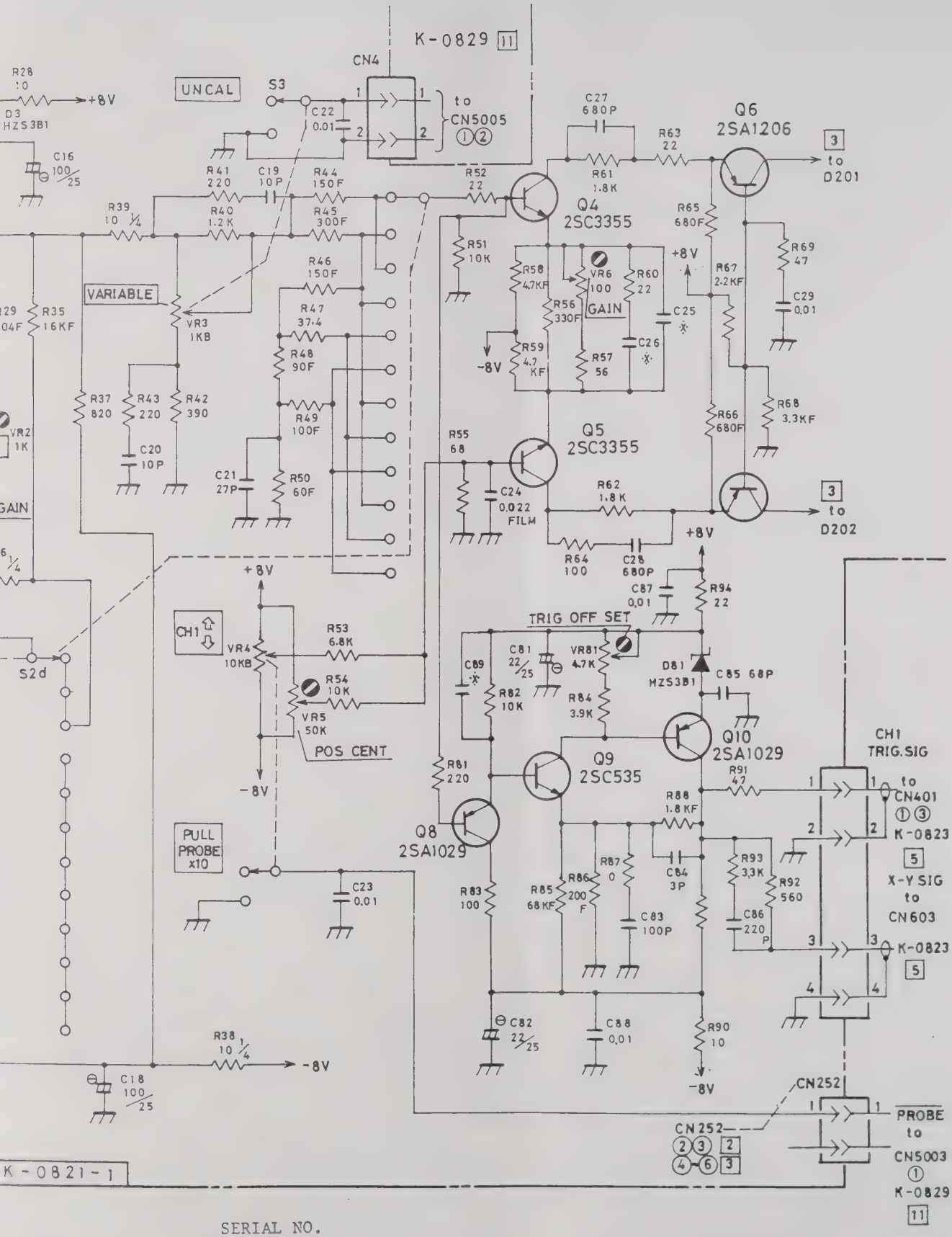

SERIAL NO.
226-00031
thru
226-00120

SCHEMATIC DIAGRAM 1443
K-0821-1
VERTICAL CH1 PREAMP

1

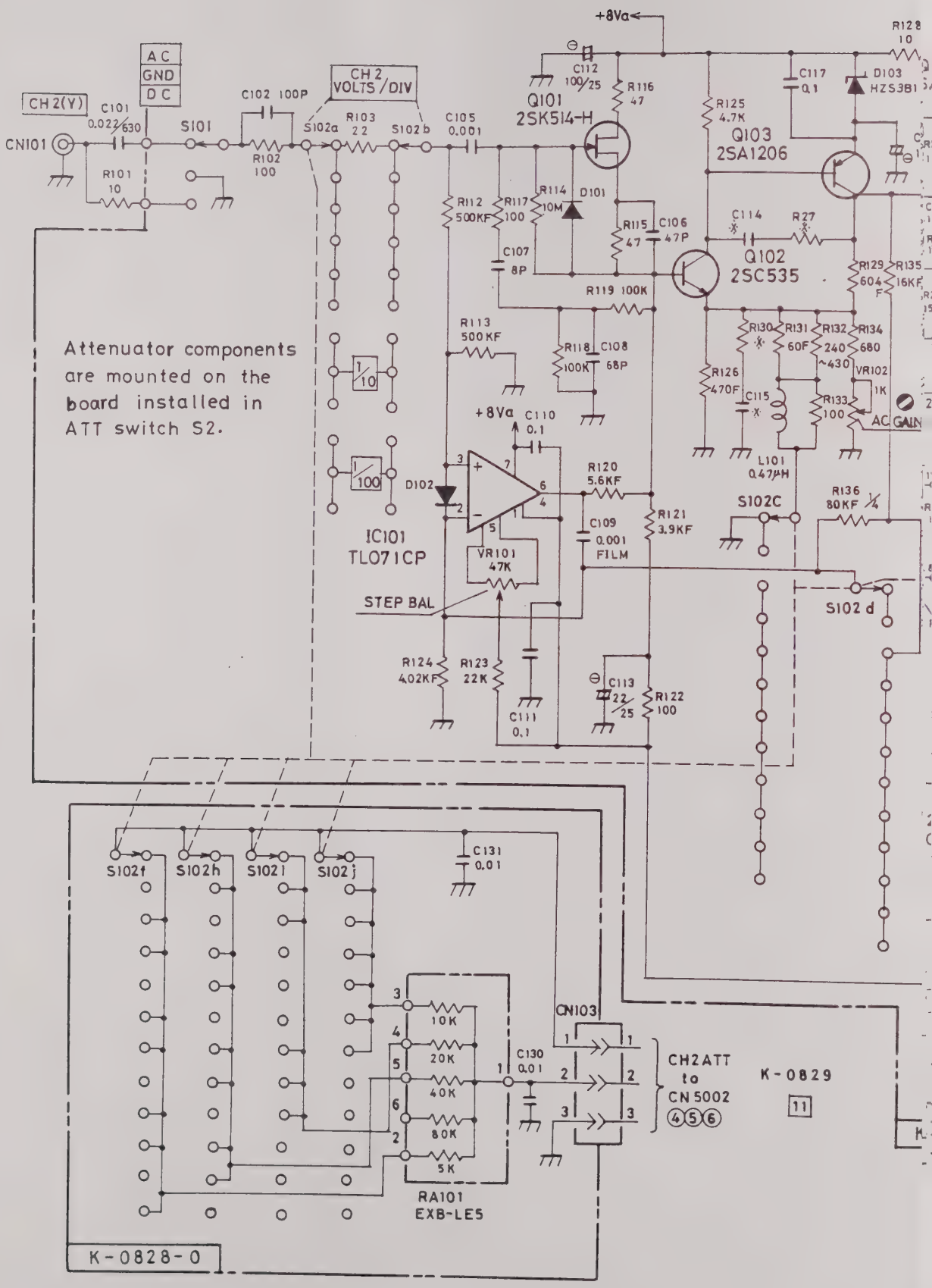
+8Va
CH 2(Y)
CN101
C101 0.022/630
AC
GND
DC
S101
R101 10
C102 100P
R102 100
CH 2 VOLTS/DIV
S102a
R103 22
S102b
C105 0.001
Q101 2SK514-H
C112 100/25
R116 47
R125 4.7K
Q103 2SA1206
C117 0.1
D103 HZS3B1
R128 10
R112 500KF
R117 100
R114 10M
D101
R115 47
C106 47P
C107 8P
Q102 2SC535
C114
R27
R129 604 F
R135 16KF
R119 100K
R113 500KF
R118 100K
C108 68P
R130
R131 60F
R132 240 ~430
R134 680
VR102 1K
AC GAIN
R126 470F
C115
R133 100
L101 0.47μH
1/10
1/100
+8Va
C110 0.1
D102
IC101 TL071CP
R120 5.6KF
C109 0.001 FILM
R121 3.9KF
S102C
R136 80KF 1/4
VR101 47K
STEP BAL
S102 d
R124 402KF
R123 22K
C111 0.1
C113 22/25
R122 100
Attenuator components are mounted on the board installed in ATT switch S2.
S102f
S102h
S102i
S102j
C131 0.01
10K
20K
40K
80K
5K
RA101 EXB-LE5
C130 0.01
CN103
CH2ATT to CN5002 ④⑤⑥
K-0829
11
K-0828-0

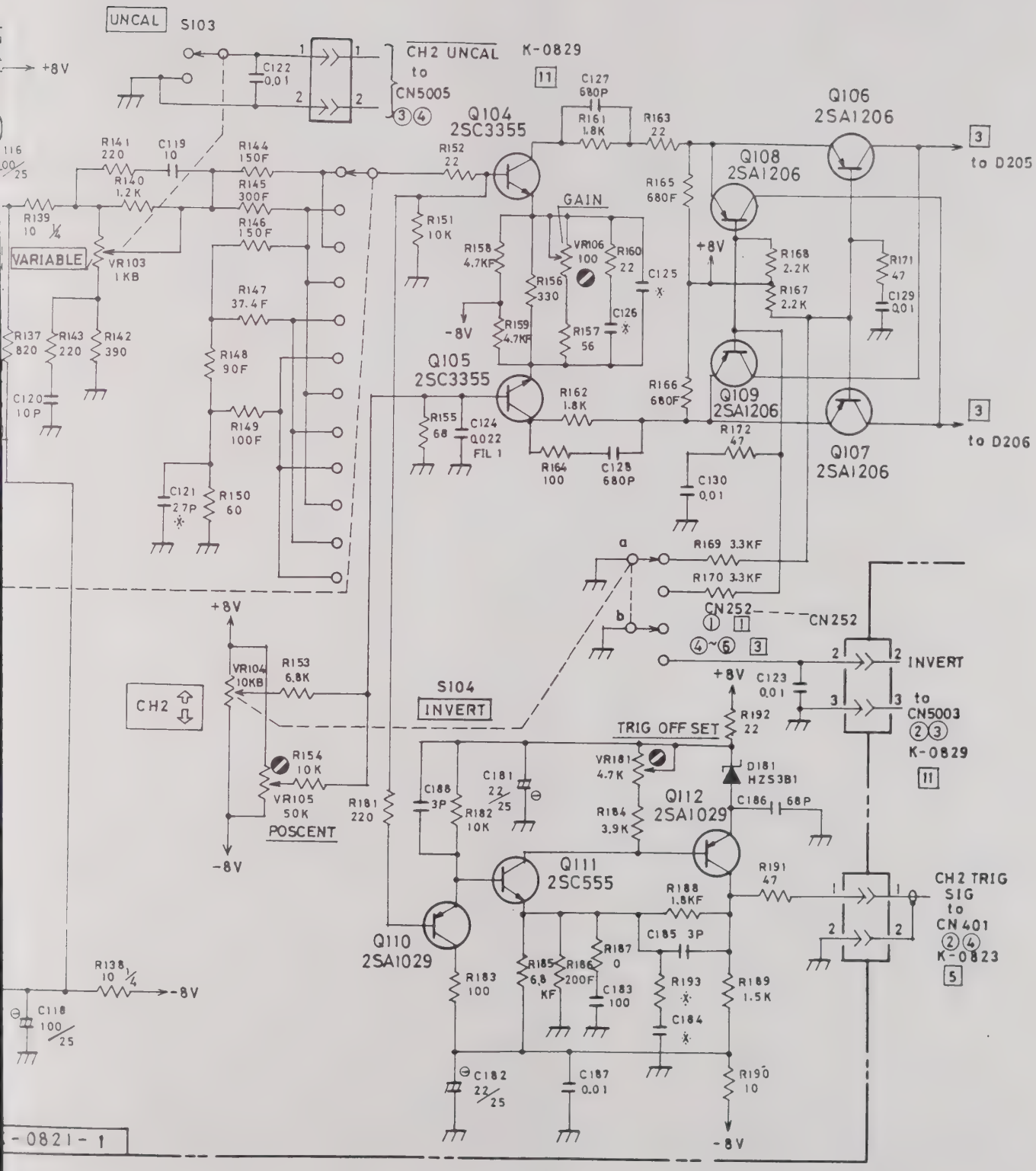

SERIAL NO.
226-00031
thru
226-00120

SCHEMATIC DIAGRAM 1443
K-0821-1
VERTICAL CH2 PREAMP

2

	1241A	1242A	1243A
R208		1K	1K
C202		15P	15P
C204		OPEN	10P
C205		OPEN	10P
C213		OPEN	
C214		OPEN	

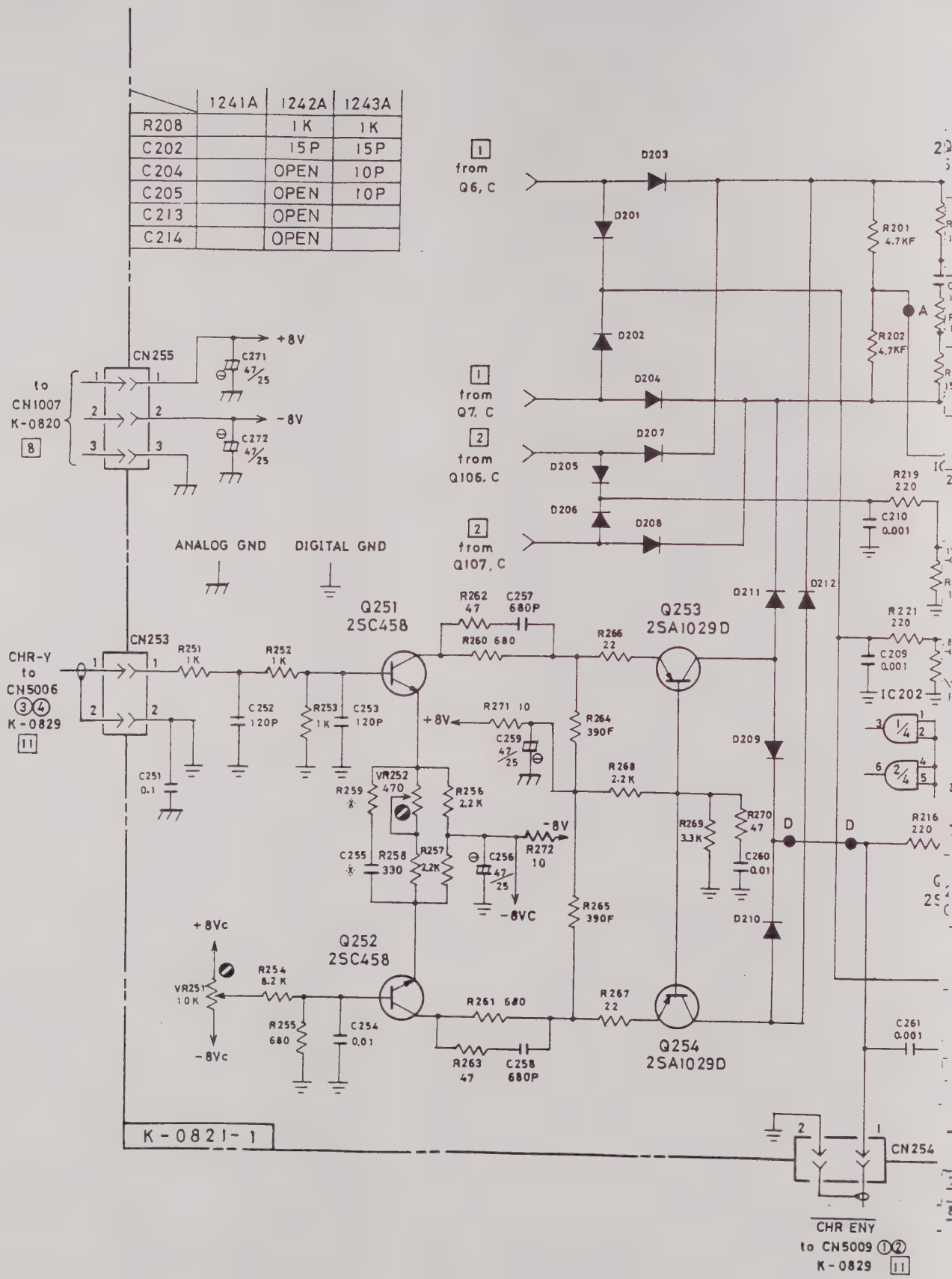

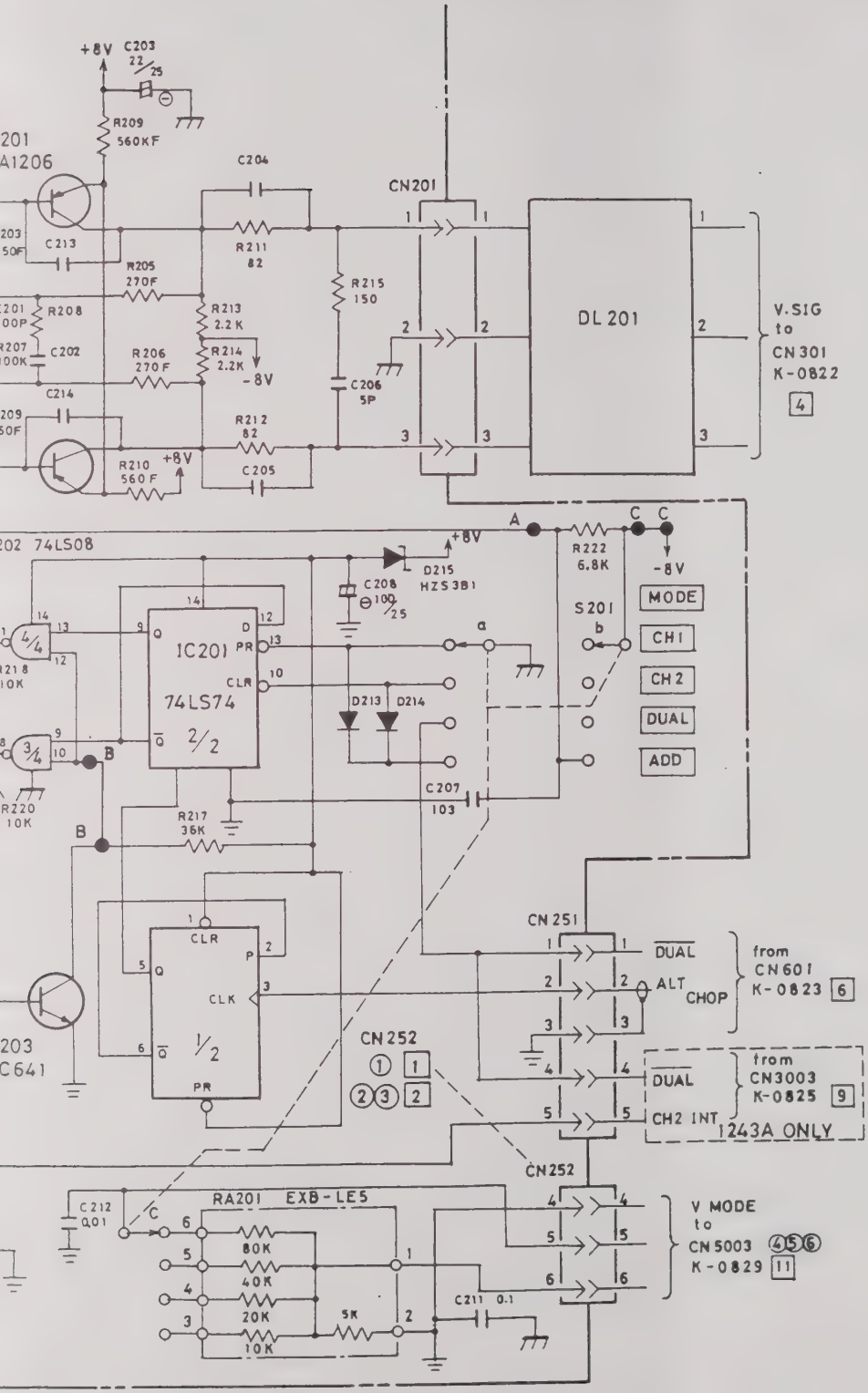

SERIAL NO.
226-00031
thru
226-00120

SCHEMATIC DIAGRAM 1443
K-0821-1

VERTICAL
R/O INTERFACE & DL DRIVER

3

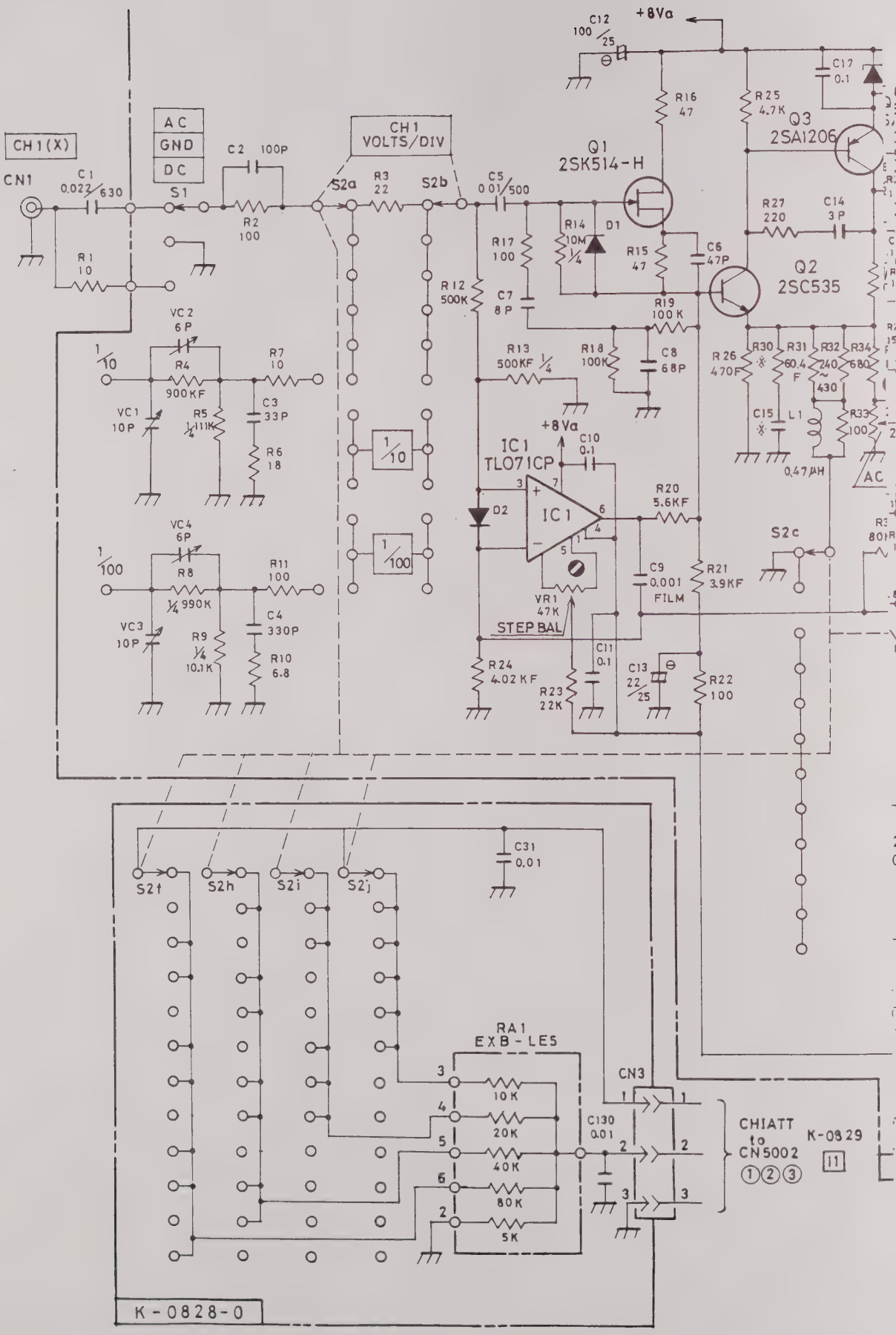
CH1(X)
CN1
C1 0.022/630
AC
GND
DC
S1
C2 100P
R2 100
R1 10
CH1 VOLTS/DIV
S2a
R3 22
S2b
C5 0.01/500
C12 100/25
+8Va
R16 47
R25 4.7K
C17 0.1
Q3 2SA1206
Q1 2SK514-H
R14 10M 1/4
D1
R15 47
C6 47P
R27 220
C14 3P
Q2 2SC535
R17 100
C7 8P
R12 500K
R19 100K
R13 500KF 1/4
R18 100K
C8 68P
R26 470F
R30
R31 60.4 F
R32 240 ~ 430
R34 680
C15
L1
R33 100
0.47μH
AC
VC2 6P
1/10
R4 900KF
R7 10
VC1 10P
R5 1/4 111K
C3 33P
R6 18
1/10
1/100
IC1 TL071CP
C10 0.1
D2
R20 5.6KF
S2c
VC4 6P
1/100
R8 1/4 990K
R11 100
C9 0.001 FILM
R21 3.9KF
VR1 47K
STEP BAL
VC3 10P
R9 1/4 10.1K
C4 330P
R10 6.8
C11 0.1
C13 22/25
R24 4.02KF
R23 22K
R22 100
C31 0.01
S2f
S2h
S2i
S2j
RA1 EXB-LE5
10K
20K
40K
80K
5K
C130 0.01
CN3
CHIATT to CN5002 ①②③
K-0829
11
K-0828-0

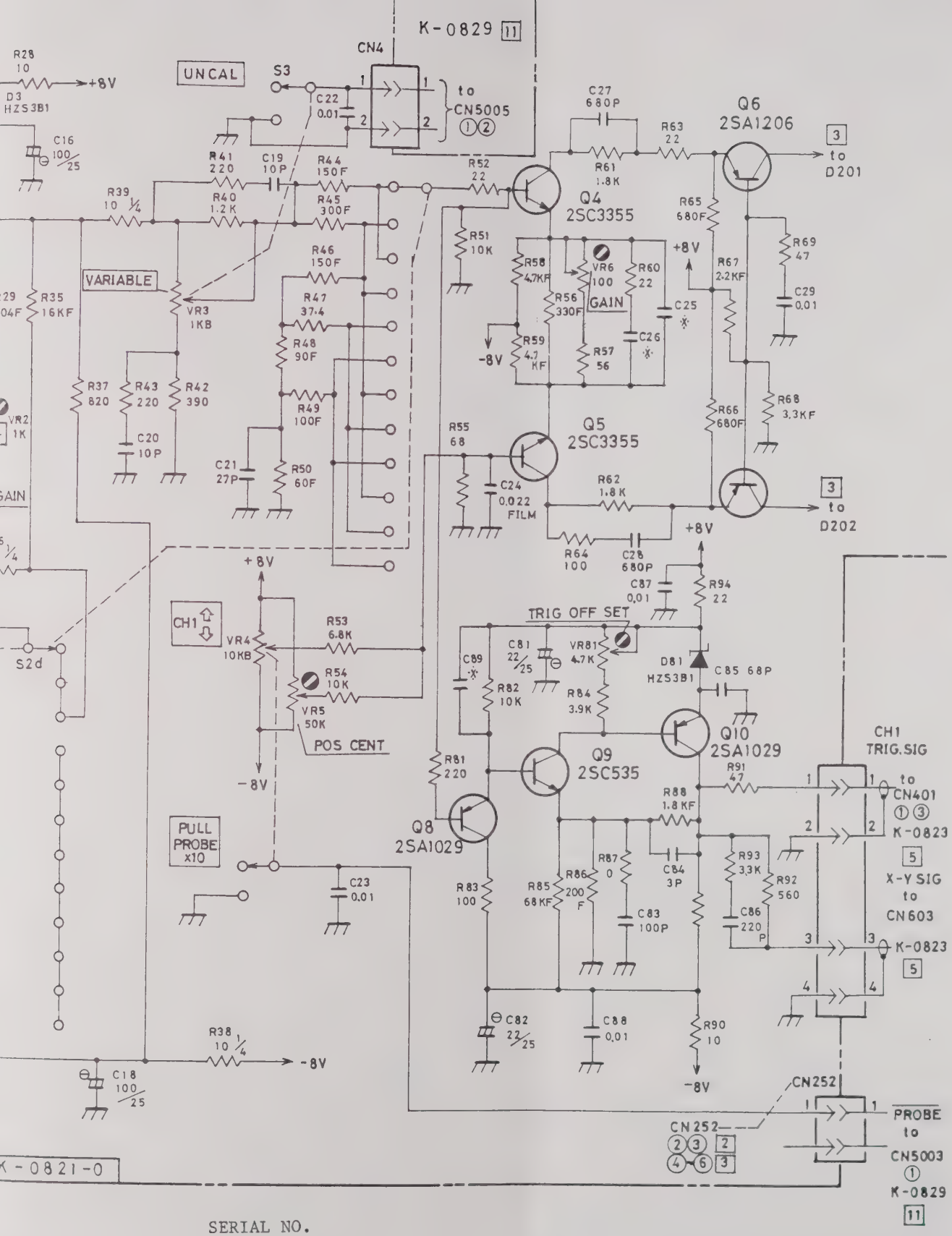

SERIAL NO.
226-00121
&
HIGHER

SCHEMATIC DIAGRAM 1443
K-0821-0
VERTICAL CH1 PREAMP

1

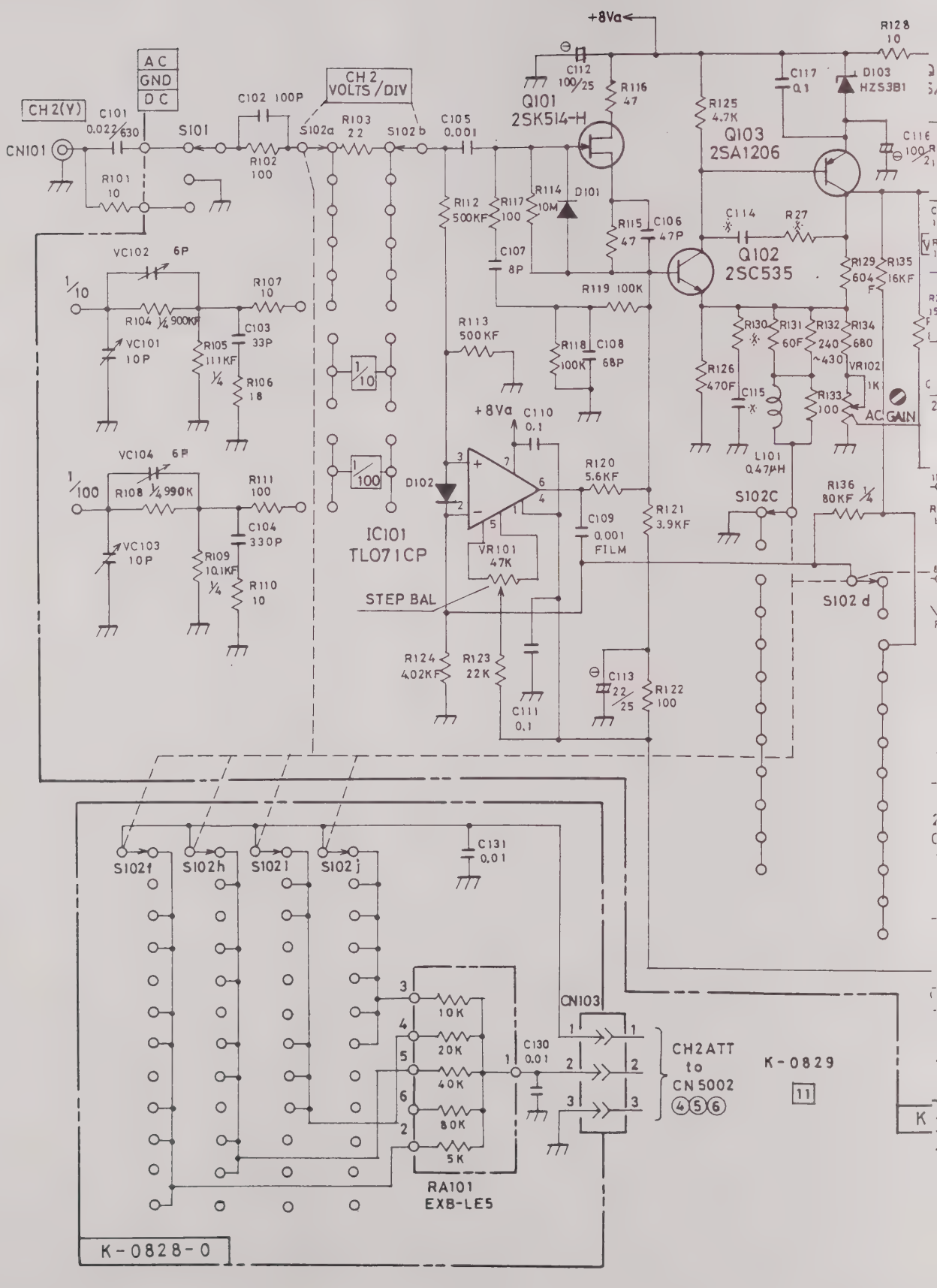
+8Va
CH2(Y)
CN101
C101 0.022/630
AC
GND
DC
S101
R101 10
C102 100P
R102 100
CH2 VOLTS/DIV
S102a
R103 22
S102b
C105 0.001
Q101 2SK514-H
C112 100/25
R116 47
R125 4.7K
Q103 2SA1206
C117 0.1
D103 HZS3B1
R128 10
C116 100
R112 500KF
R117 100
R114 10M
D101
C107 8P
R115 47
C106 47P
C114
R27
Q102 2SC535
R129 604
R135 16KF
R119 100K
VC102 6P
1/10
R104 1/4 900KF
R107 10
C103 33P
VC101 10P
R105 111KF 1/4
R106 18
R113 500KF
R118 100K
C108 68P
R130
R131 60F
R132 240
R134 680
~430
VR102 1K
R126 470F
C115
R133 100
AC GAIN
L101 0.47μH
1/10
1/100
+8Va
C110 0.1
VC104 6P
1/100
R108 1/4 990K
R111 100
C104 330P
D102
IC101 TL071CP
R120 5.6KF
C109 0.001 FILM
R121 3.9KF
S102C
R136 80KF 1/4
VC103 10P
R109 10.1KF 1/4
R110 10
VR101 47K
STEP BAL
S102d
R124 402KF
R123 22K
C111 0.1
C113 22/25
R122 100
S102f
S102h
S102i
S102j
C131 0.01
CN103
10K
20K
40K
80K
5K
C130 0.01
CH2ATT to CN5002 ④⑤⑥
K-0829
11
RA101 EXB-LE5
K-0828-0

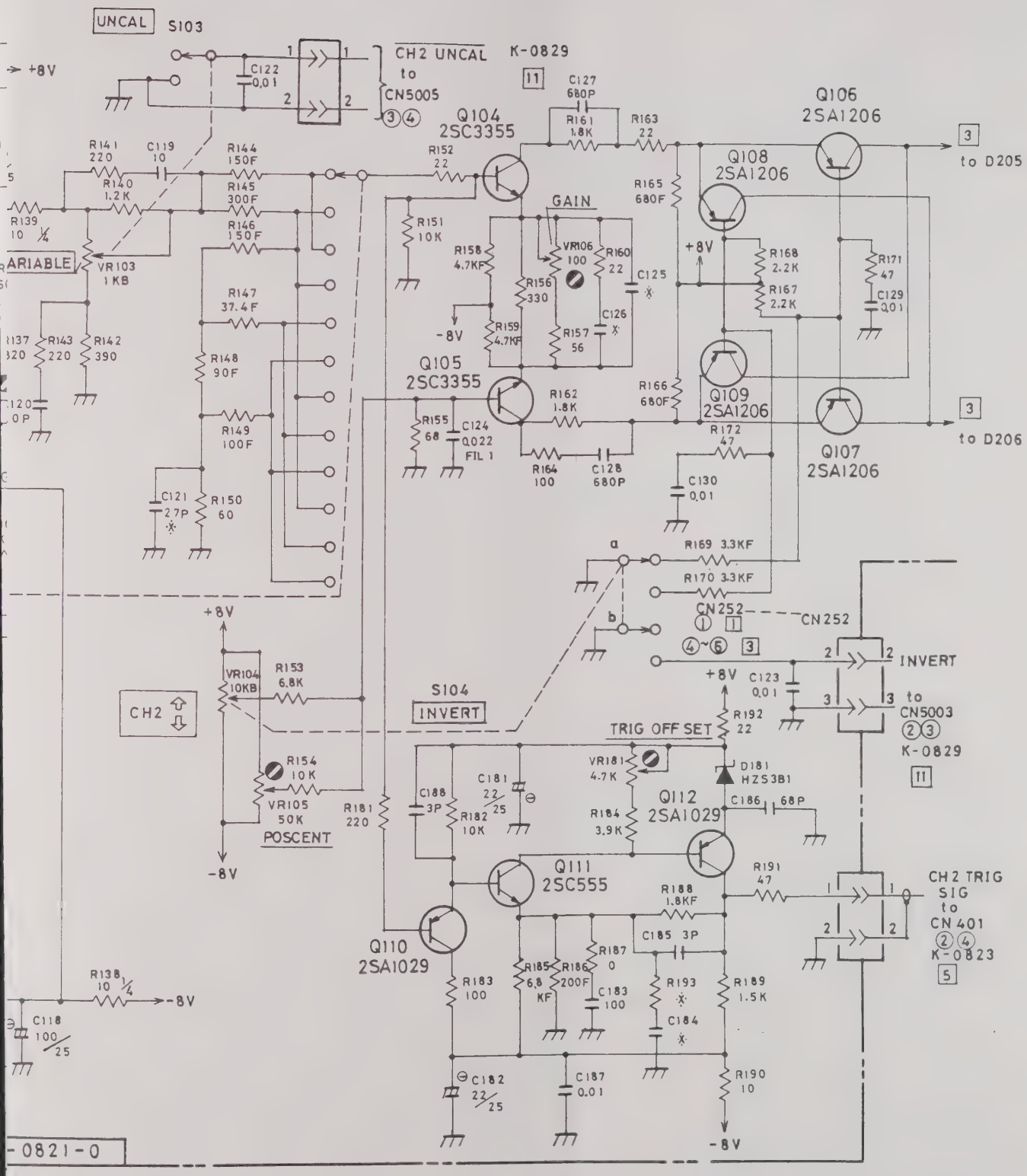

SERIAL NO.
226-00121
&
HIGHER

SCHEMATIC DIAGRAM 1443
K-0821-0 K-0828-0
VERTICAL CH2 PREAMP

2

	1241A	1242A	1243A
R208		1K	1K
C202		15P	15P
C204		OPEN	10P
C205		OPEN	10P
C213		OPEN	
C214		OPEN	

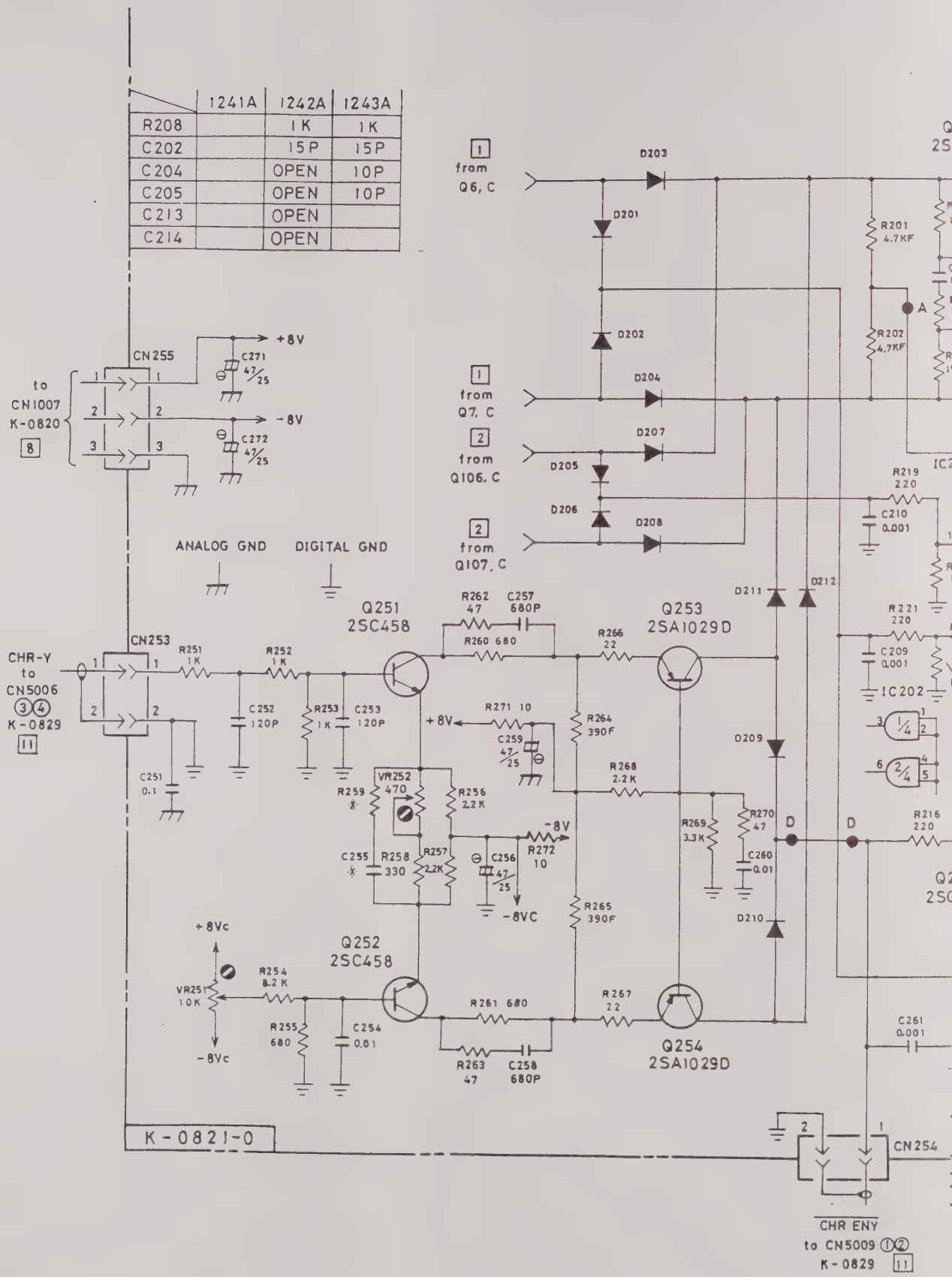

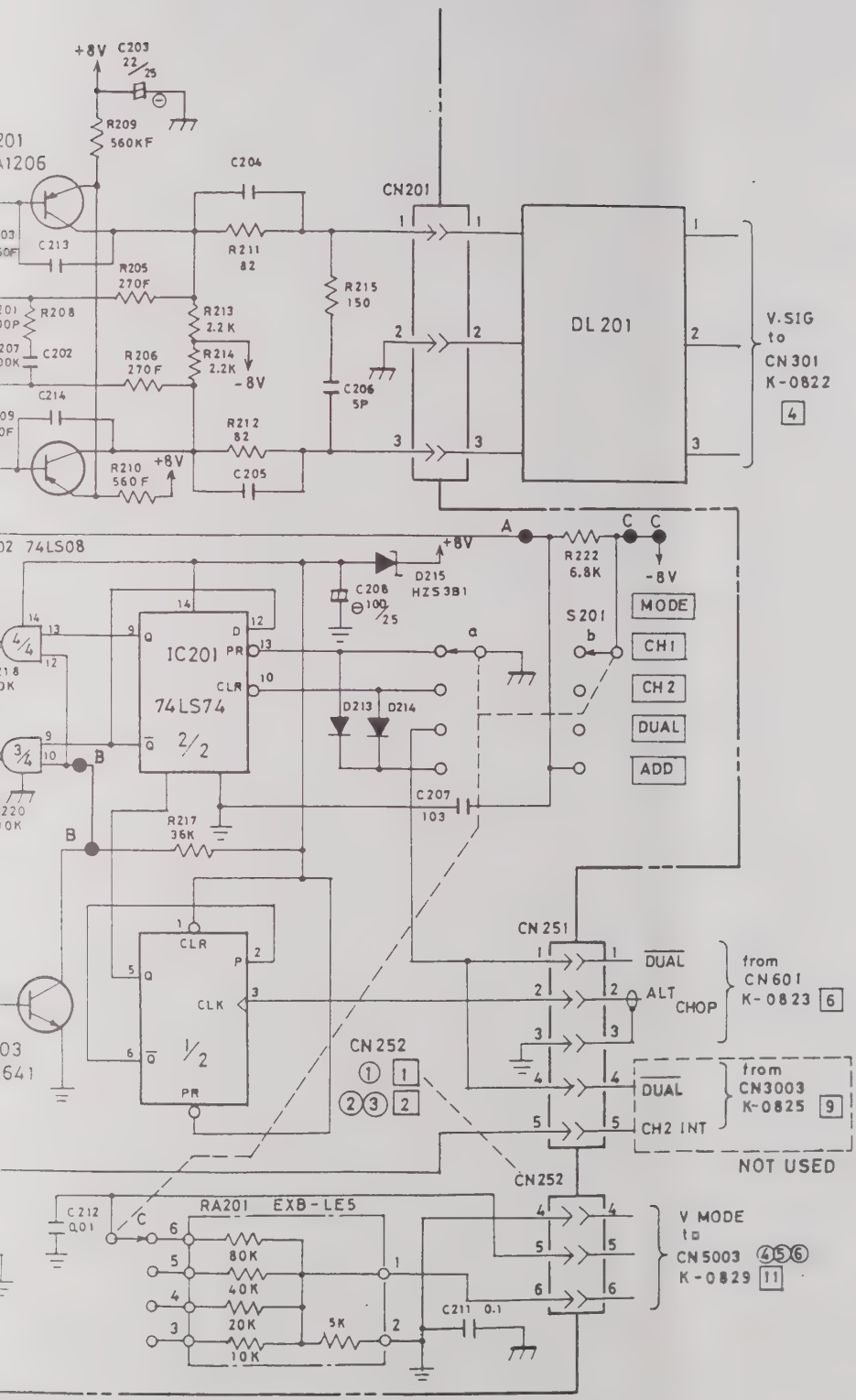

SERIAL NO.
226-00121
&
HIGHER

SCHEMATIC DIAGRAM 1443
K-0821-0

VERTICAL
R/O INTERFACE & DL DRIVER

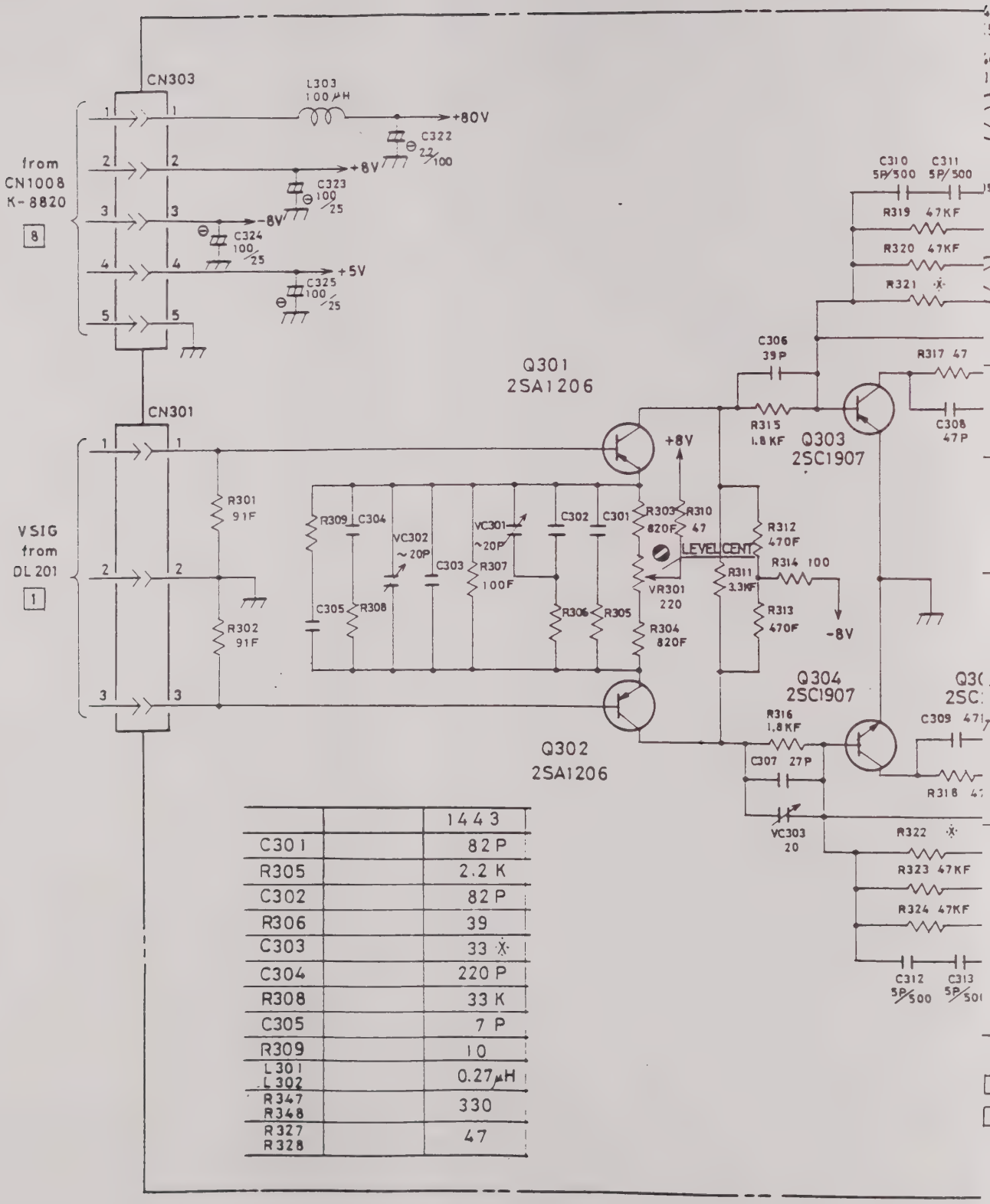

		1443
C301		82 P
R305		2.2 K
C302		82 P
R306		39
C303		33 ✳
C304		220 P
R308		33 K
C305		7 P
R309		10
L301 L302		0.27μH
R347 R348		330
R327 R328		47

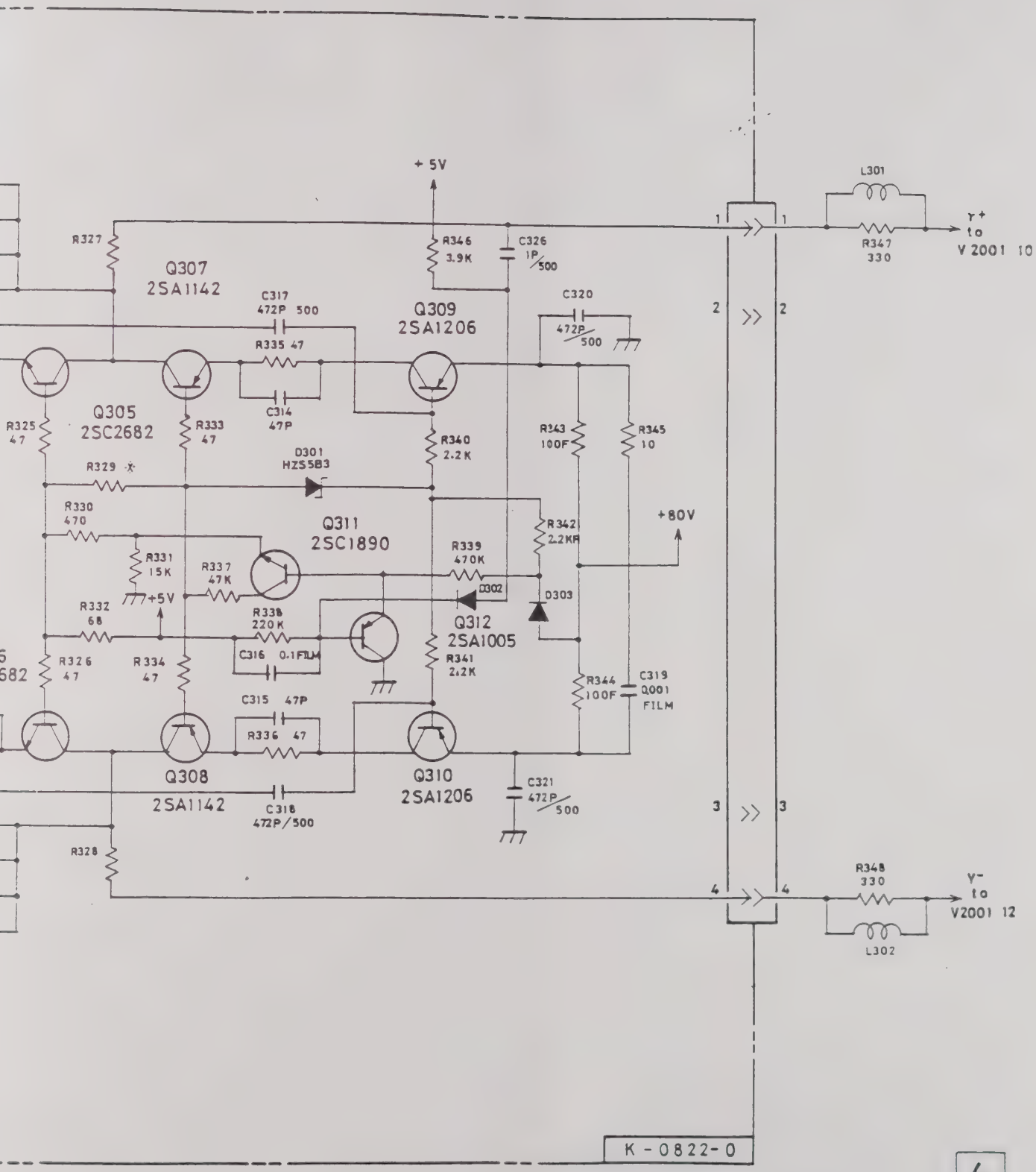

SCHEMATIC DIAGRAM 1443
K-0822-0
VERTICAL MAIN AMP

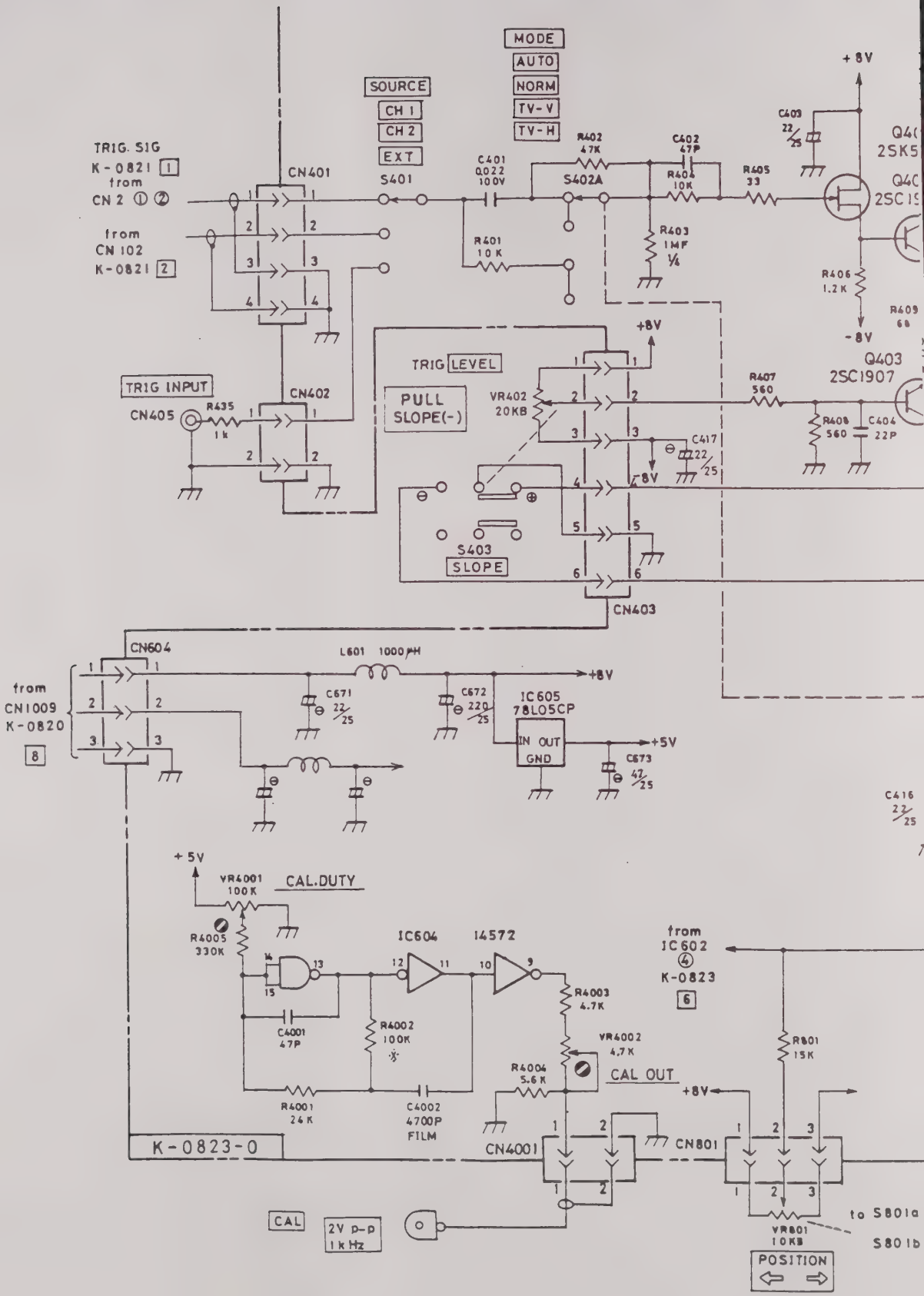
MODE
AUTO
NORM
TV-V
TV-H
SOURCE
CH 1
CH 2
EXT
TRIG. SIG
K-0821 1
from
CN 2 ① ②
from
CN 102
K-0821 2
CN401
S401
C401
0.022
100V
R402
47K
C402
47P
S402A
R404
10K
R405
33
R401
10K
R403
1MF
1/4
C403
22/25
+8V
Q40
2SK5
Q40
2SC19
R406
1.2K
R409
68
-8V
Q403
2SC1907
TRIG LEVEL
PULL
SLOPE(-)
VR402
20KB
R407
560
R408
560
C404
22P
C417
22/25
TRIG INPUT
CN405
R435
1k
CN402
S403
SLOPE
CN403
CN604
from
CN1009
K-0820
8
L601 1000μH
C671
22/25
C672
220/25
IC605
78L05CP
IN OUT
GND
+5V
C673
47/25
C416
22/25
+5V
VR4001
100K
CAL.DUTY
R4005
330K
IC604
14572
from
IC602
④
K-0823
6
R4003
4.7K
C4001
47P
R4002
100K
VR4002
4.7K
R801
15K
R4004
5.6K
CAL OUT
R4001
24K
C4002
4700P
FILM
K-0823-0
CN4001
CN801
CAL
2V p-p
1kHz
VR801
10KB
to S801a
S801b
POSITION

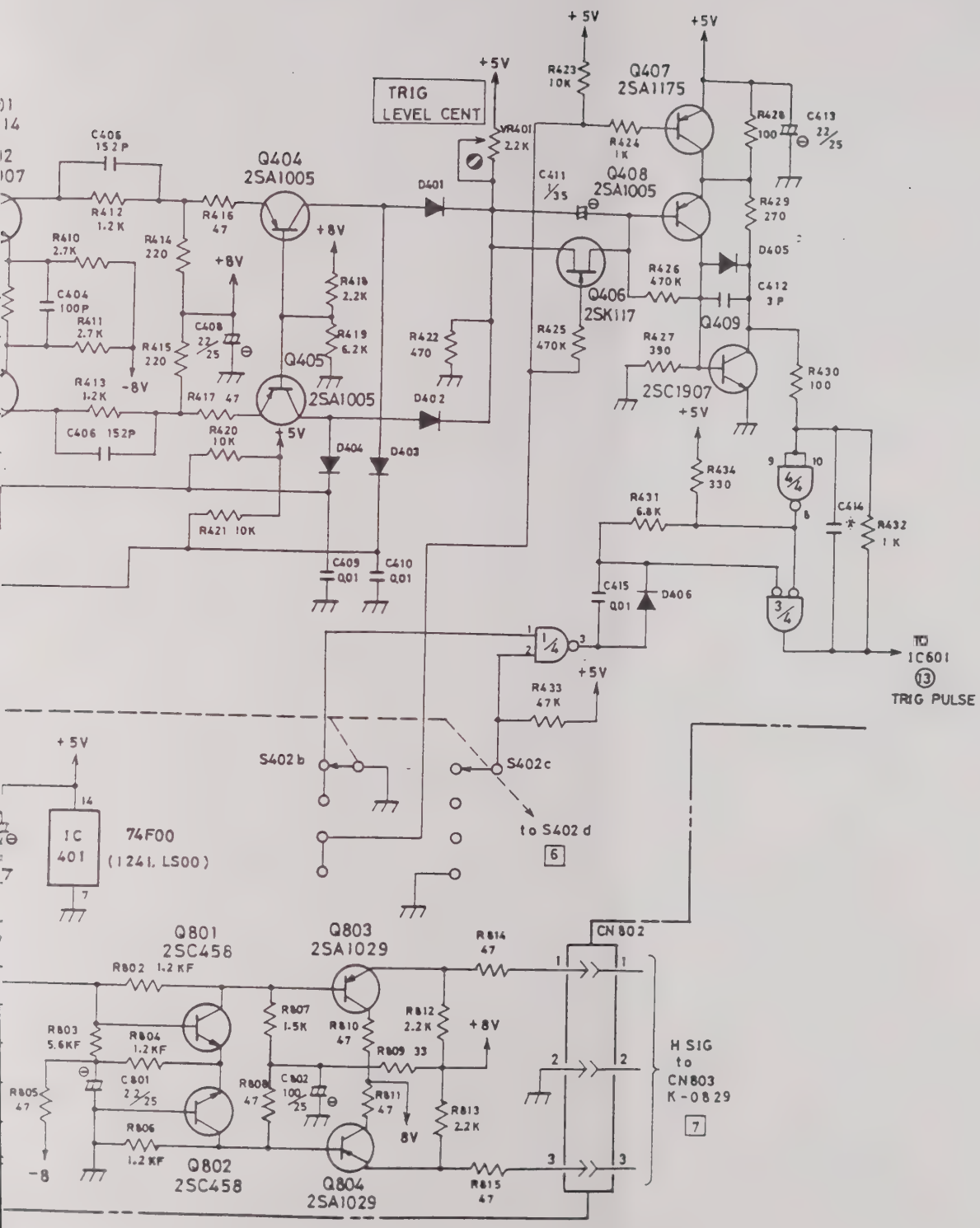

SCHEMATIC DIAGRAM 1443

K-0823-0

TRIGGER GENERATOR

5

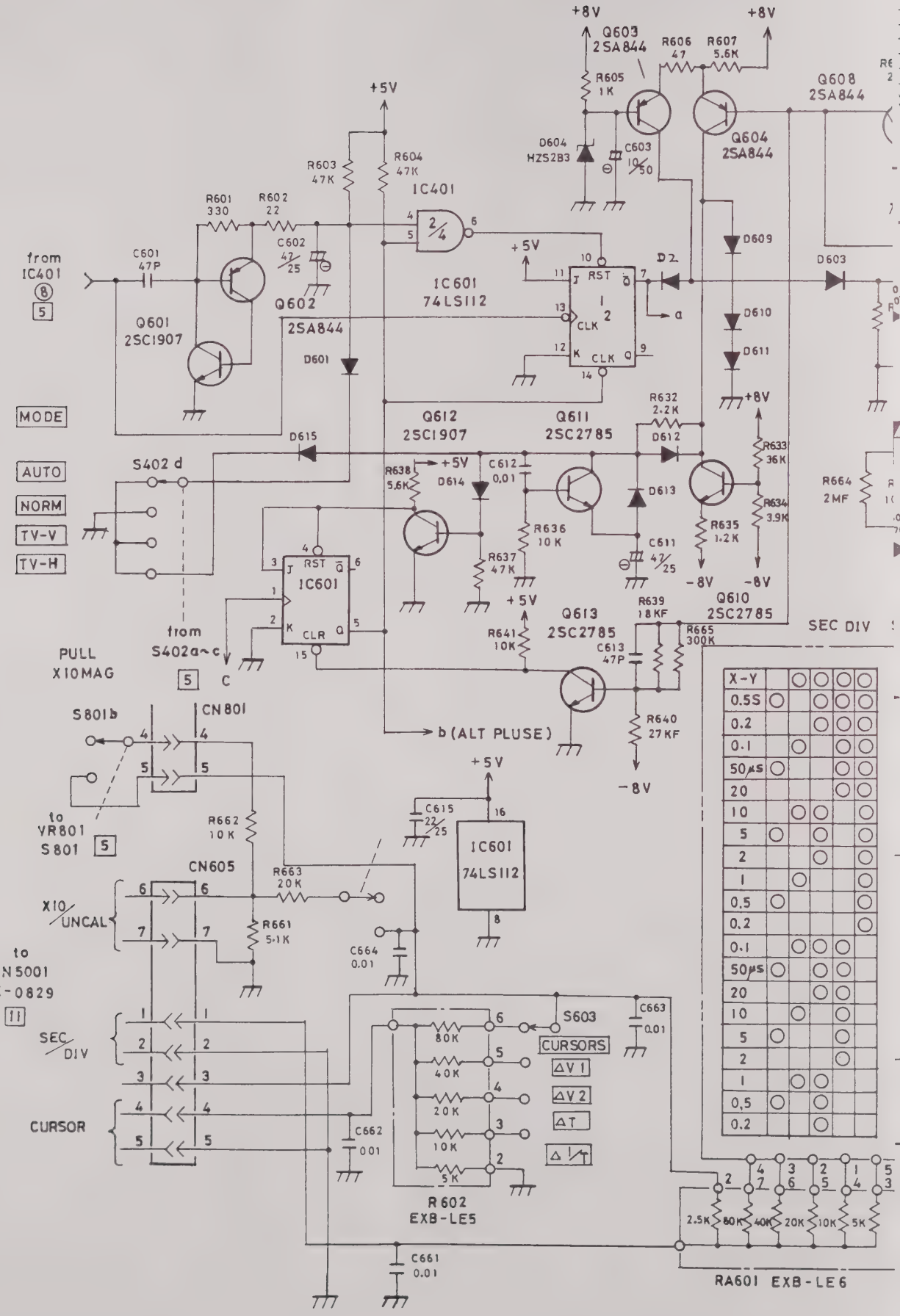
+8V
Q603
2SA844
R606
47
R607
5.6K
R605
1K
D604
HZS2B3
C603
10/50
Q604
2SA844
Q608
2SA844
+5V
R603
47K
R604
47K
IC401
R601
330
R602
22
C601
47P
C602
47/25
from
IC401
8
5
Q601
2SC1907
Q602
2SA844
D601
IC601
74LS112
D609
D610
D611
D603
D2
a
MODE
AUTO
NORM
TV-V
TV-H
S402 d
D615
Q612
2SC1907
Q611
2SC2785
R632
2.2K
D612
R633
36K
R634
3.9K
R635
1.2K
R638
5.6K
D614
C612
0.01
D613
C611
47/25
R636
10K
R637
47K
R664
2MF
-8V
Q610
2SC2785
IC601
RST
CLR
from
S402a~c
C
PULL
X10MAG
5
R641
10K
Q613
2SC2785
R639
18KF
R665
300K
C613
47P
R640
27KF
SEC DIV
b (ALT PLUSE)
S801b
CN801
to
VR801
S801
5
R662
10K
C615
22/25
IC601
74LS112
16
8
CN605
R663
20K
X10/UNCAL
R661
5.1K
C664
0.01
to
CN5001
K-0829
11
SEC/DIV
CURSOR
C662
0.01
S603
CURSORS
ΔV1
ΔV2
ΔT
Δ1/T
80K
40K
20K
10K
5K
C663
0.01
R602
EXB-LE5
C661
0.01
2.5K
80K
40K
20K
10K
5K
RA601 EXB-LE6
X-Y
0.5S
0.2
0.1
50μs
20
10
5
2
1
0.5
0.2
0.1
50μs
20
10
5
2
1
0.5
0.2

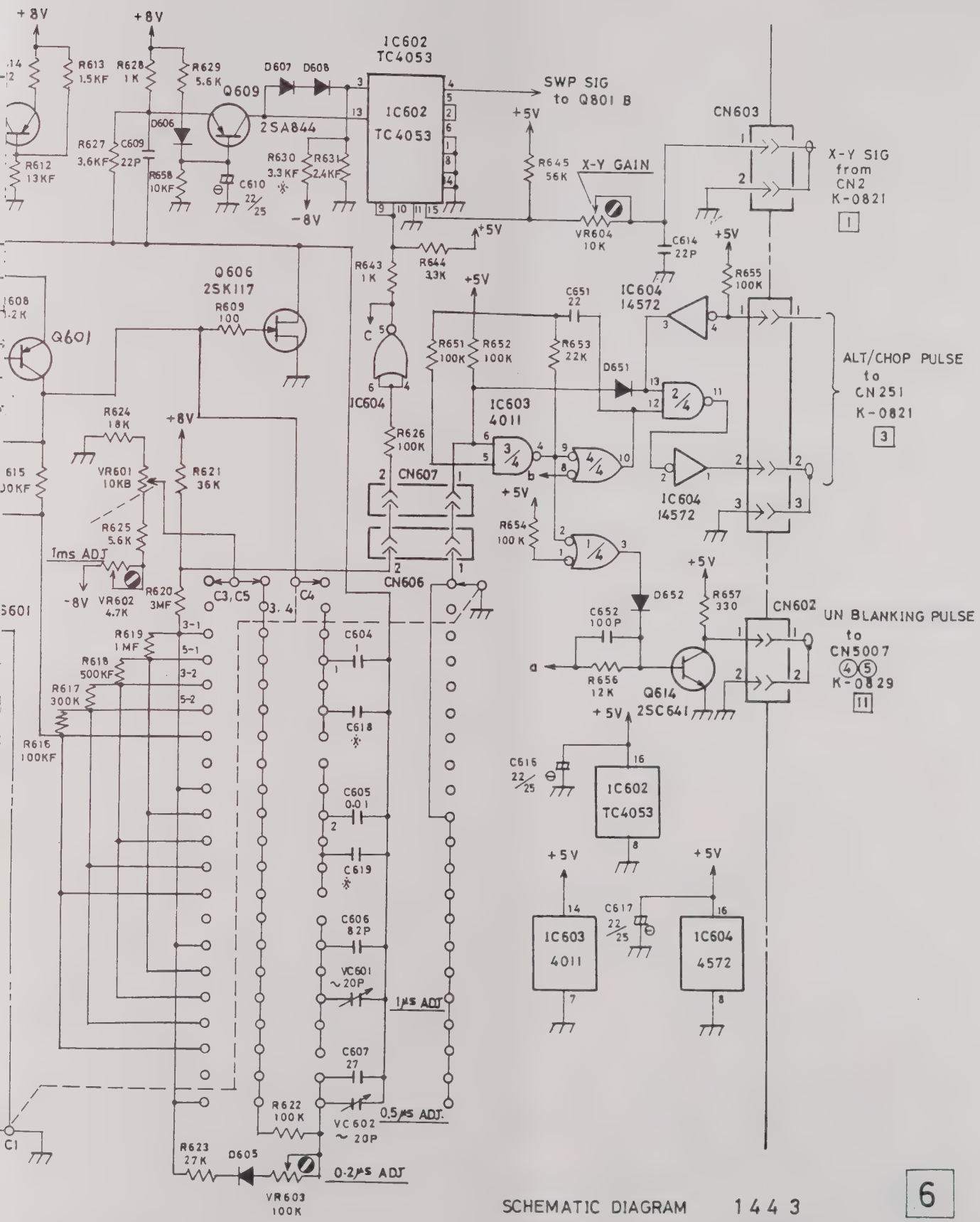

SCHEMATIC DIAGRAM 1443

K-0823-0

SWEEP GENERATOR

6

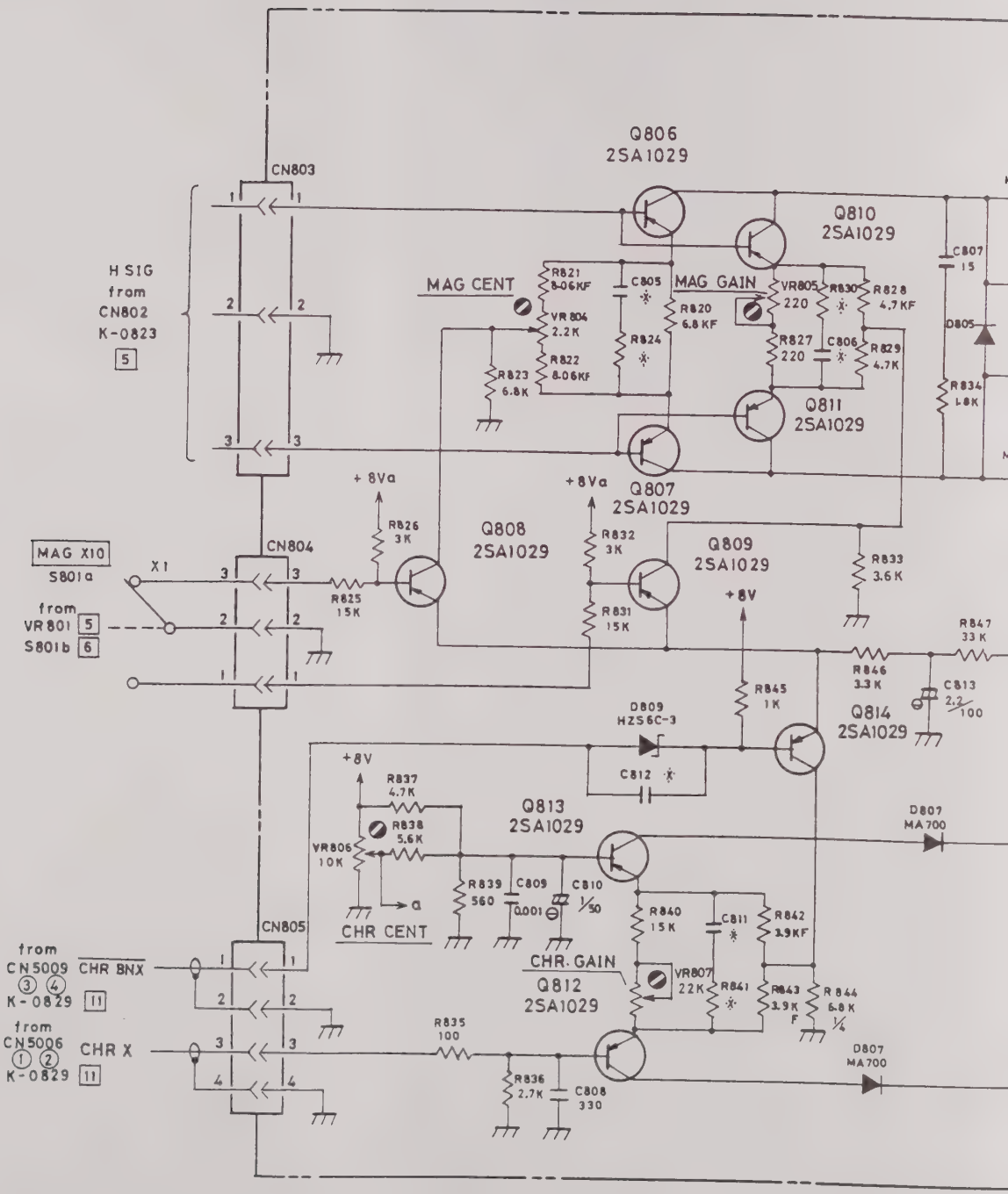
Q806
2SA1029
CN803
Q810
2SA1029
H SIG
from
CN802
K-0823
5
MAG CENT
R821
8.06KF
VR 804
2.2K
R822
8.06KF
R823
6.8K
C805
R824
MAG GAIN
R820
6.8KF
VR805
220
R830
R828
4.7KF
R827
220
C806
R829
4.7K
Q811
2SA1029
C807
15
D805
R834
1.8K
+8Va
R826
3K
Q808
2SA1029
+8Va
R832
3K
Q807
2SA1029
Q809
2SA1029
R833
3.6K
MAG X10
S801a
X1
CN804
from
VR801
5
S801b
6
R825
15K
R831
15K
+8V
R847
33K
R846
3.3K
C813
2.2
100
R845
1K
Q814
2SA1029
D809
HZS6C-3
C812
+8V
R837
4.7K
R838
5.6K
VR806
10K
Q813
2SA1029
D807
MA700
R839
560
C809
0.001
C810
1/50
CHR CENT
R840
15K
C811
R842
3.9KF
CN805
from
CN5009
CHR BNX
K-0829
11
CHR. GAIN
VR807
22K
R841
R843
3.9K
F
R844
6.8K
1/4
Q812
2SA1029
from
CN5006
CHR X
K-0829
11
R835
100
D807
MA700
R836
2.7K
C808
330

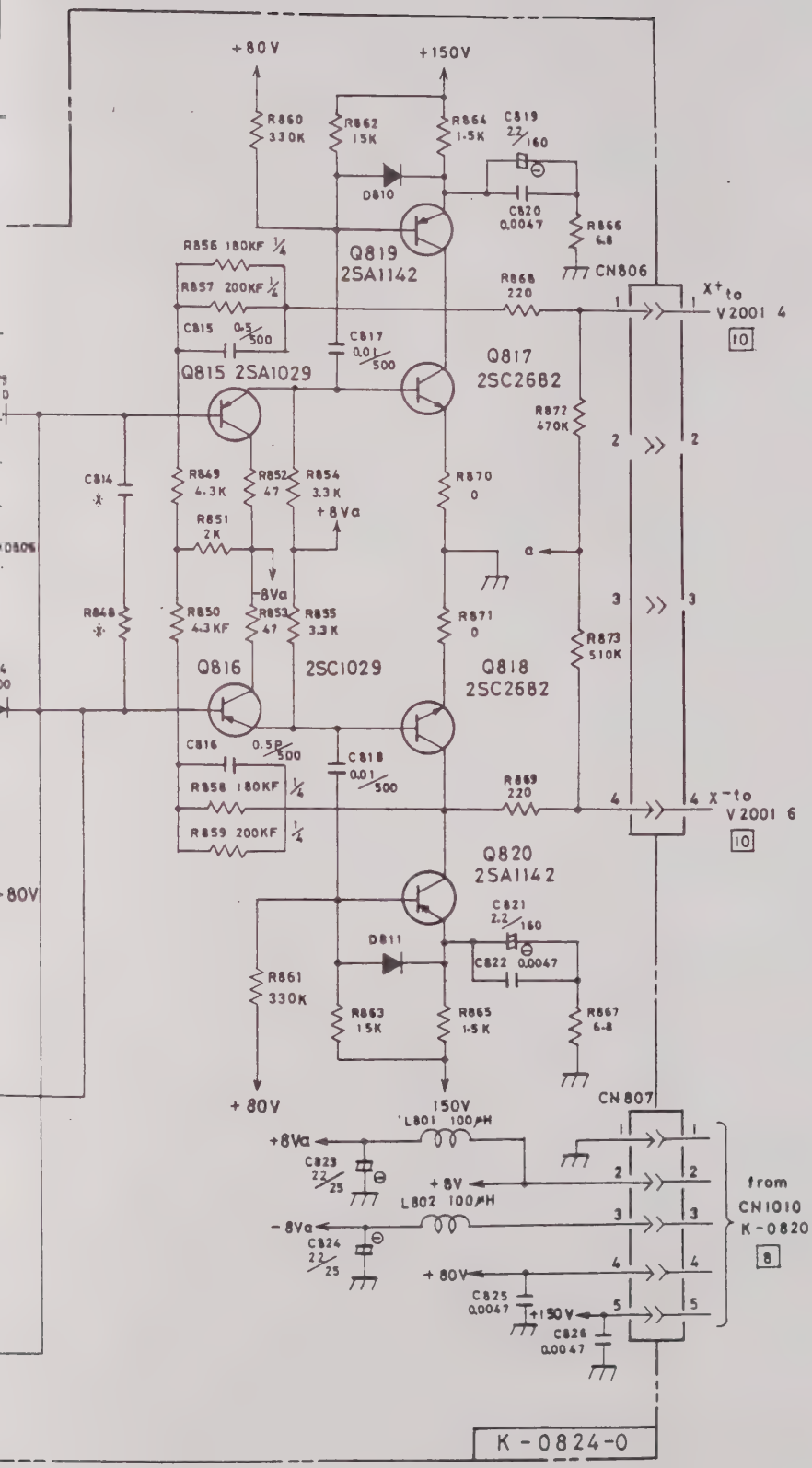

SCHEMATIC DIAGRAM 1443

K-0824-0

HORIZONTAL MAIN AMP

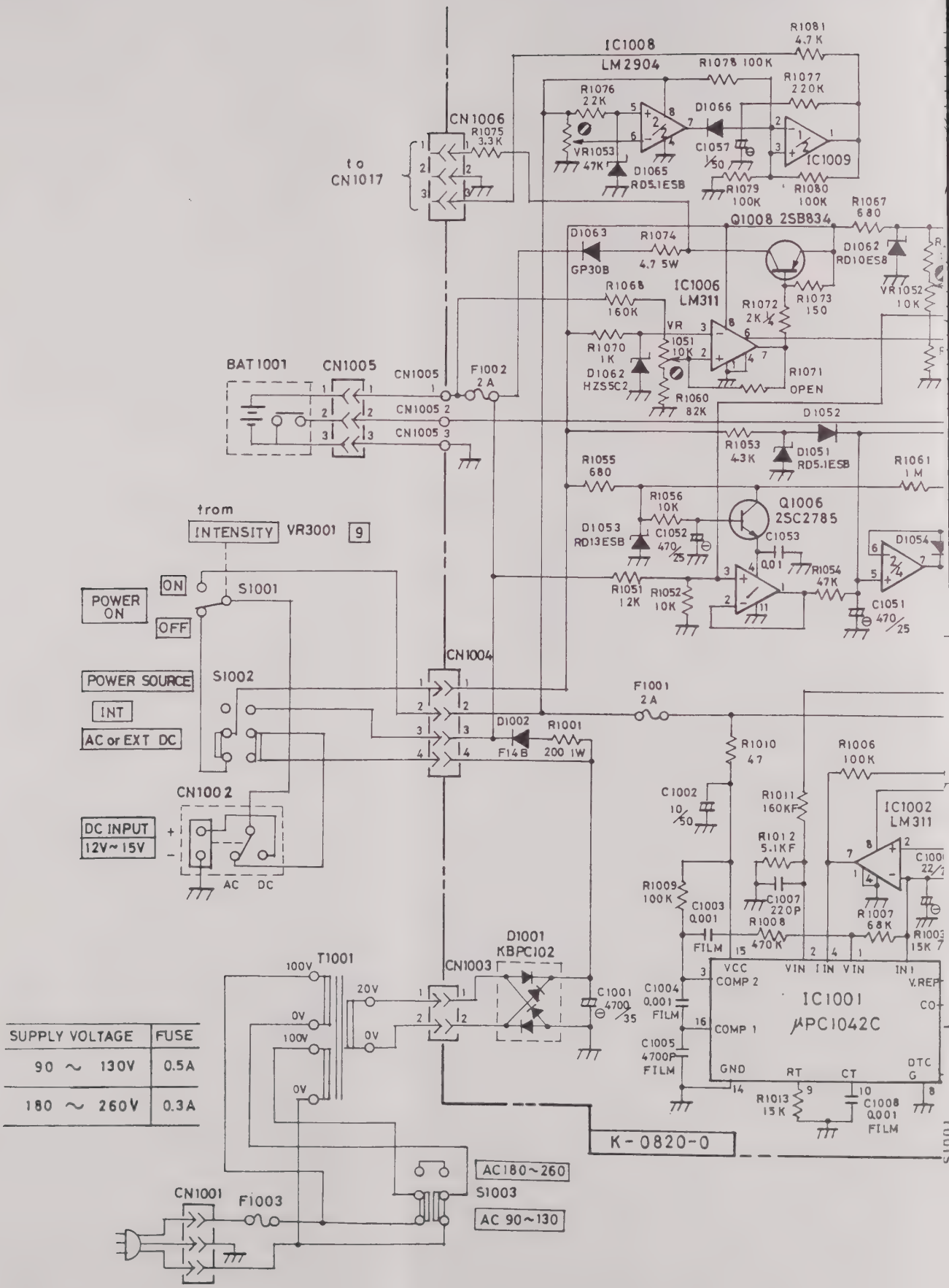

SUPPLY VOLTAGE	FUSE
90 ~ 130V	0.5A
180 ~ 260V	0.3A

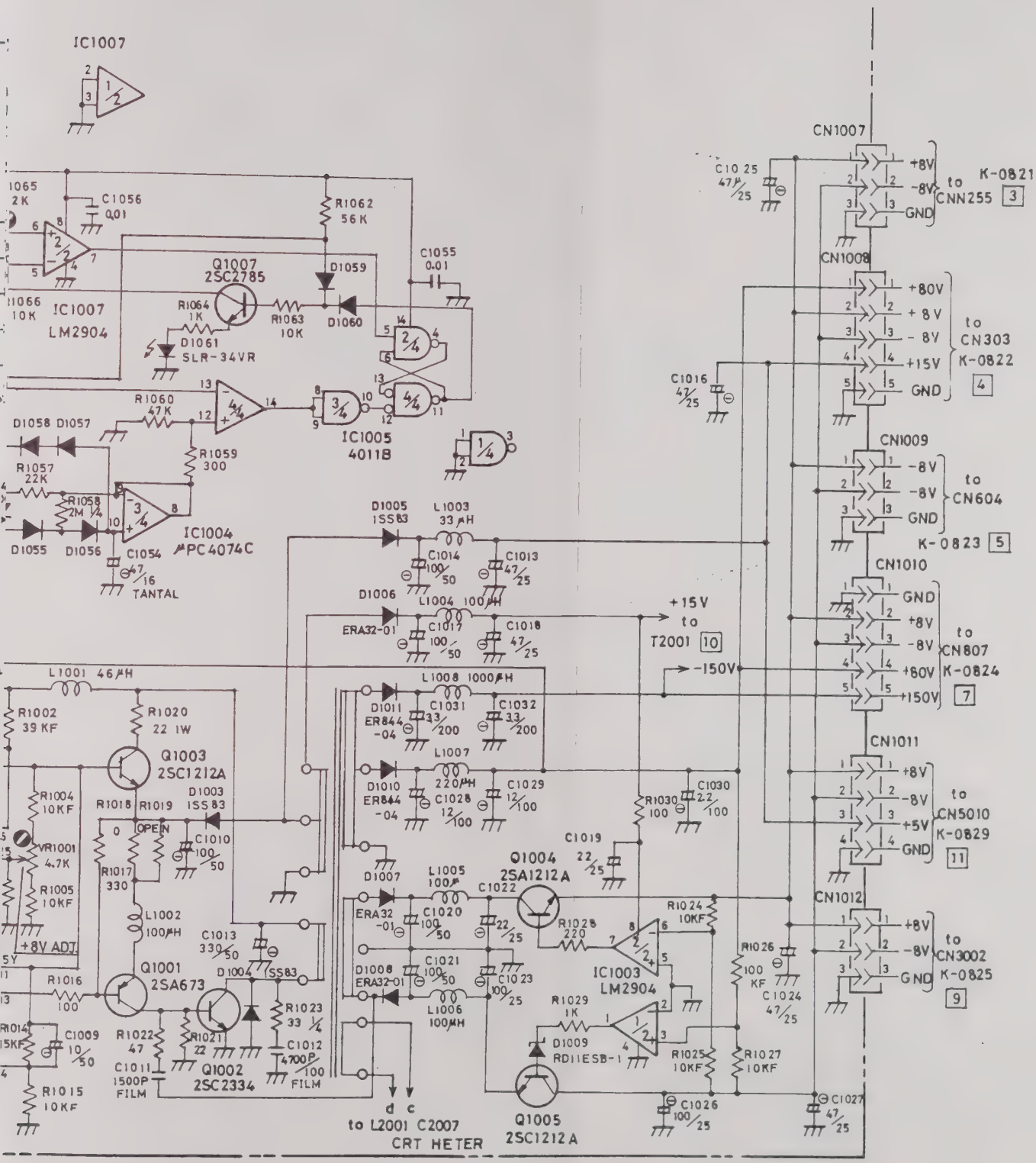

SCHEMATIC DIAGRAM 1443

K-0820-0

POWER SUPPLY

& BATTERY CHARGER

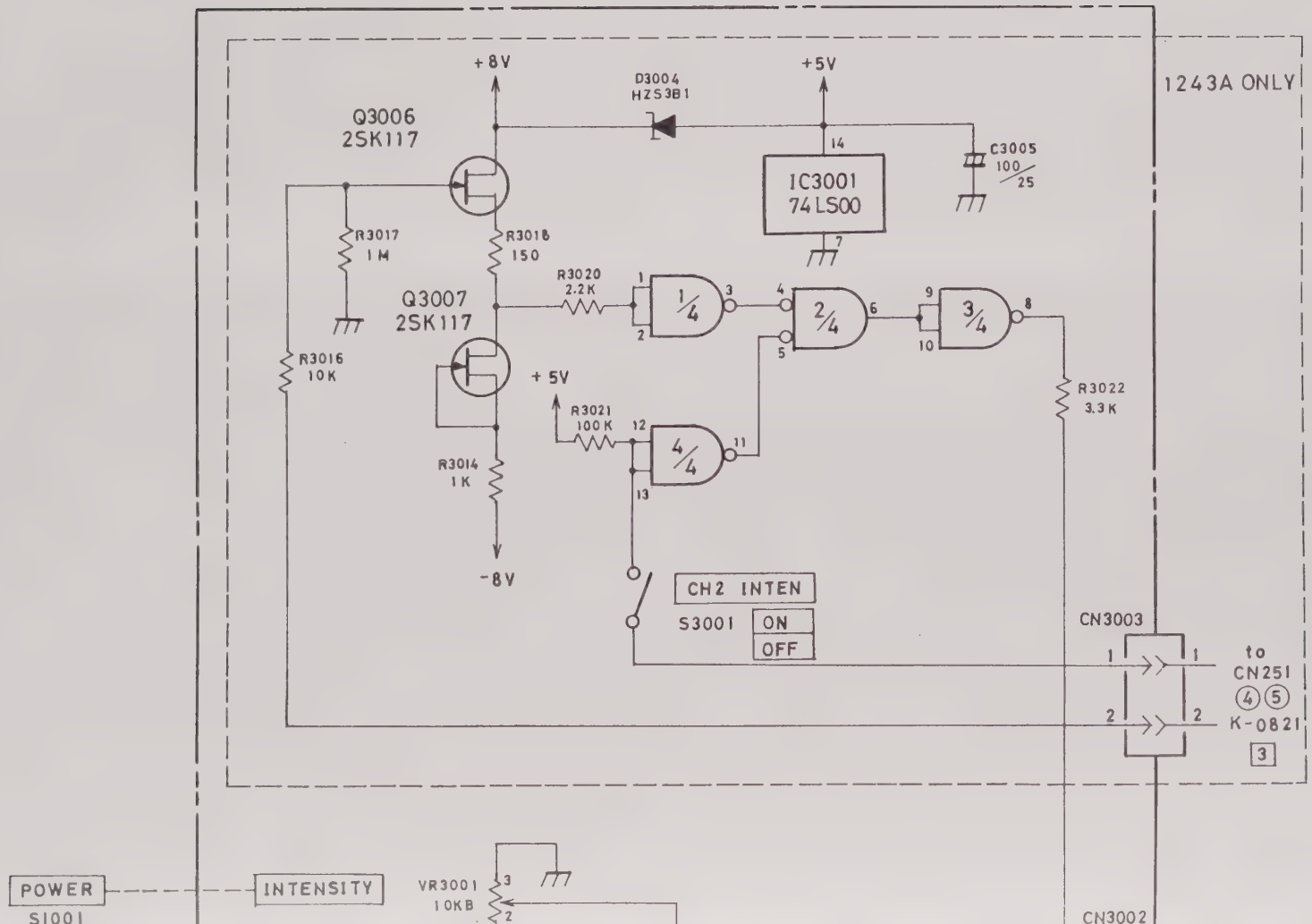
1243A ONLY
+8V
+5V
D3004
HZS3B1
Q3006
2SK117
C3005
100
25
IC3001
74LS00
R3017
1M
R3018
150
R3020
2.2K
Q3007
2SK117
R3016
10K
+5V
R3021
100K
R3022
3.3K
R3014
1K
-8V
CH2 INTEN
S3001
ON
OFF
CN3003
to
CN251
4 5
K-0821
3
POWER
S1001
INTENSITY
VR3001
10KB
CN3002

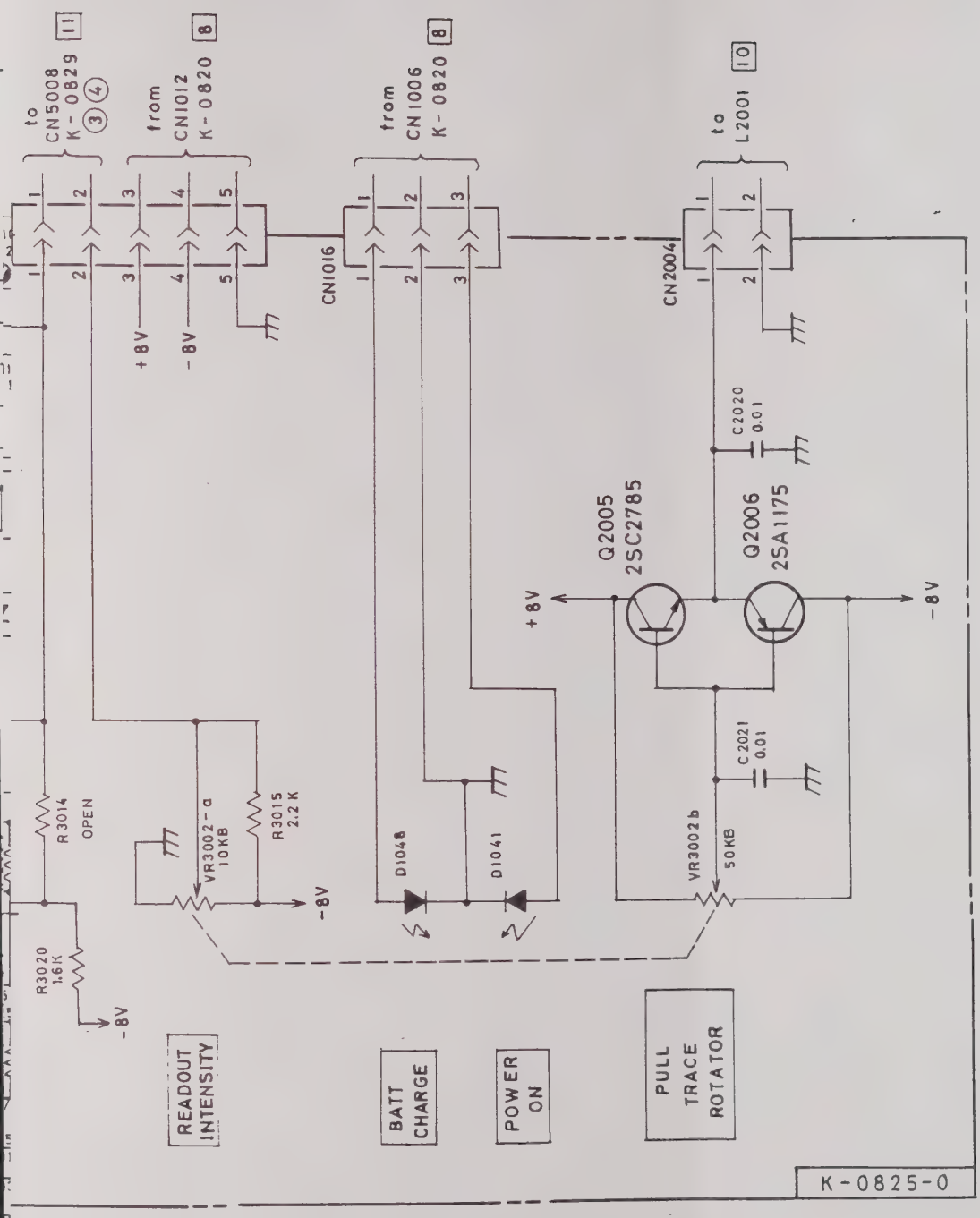

8

SCHEMATIC DIAGRAM 1443

K-0825-0

INTENSITY & ROTATION

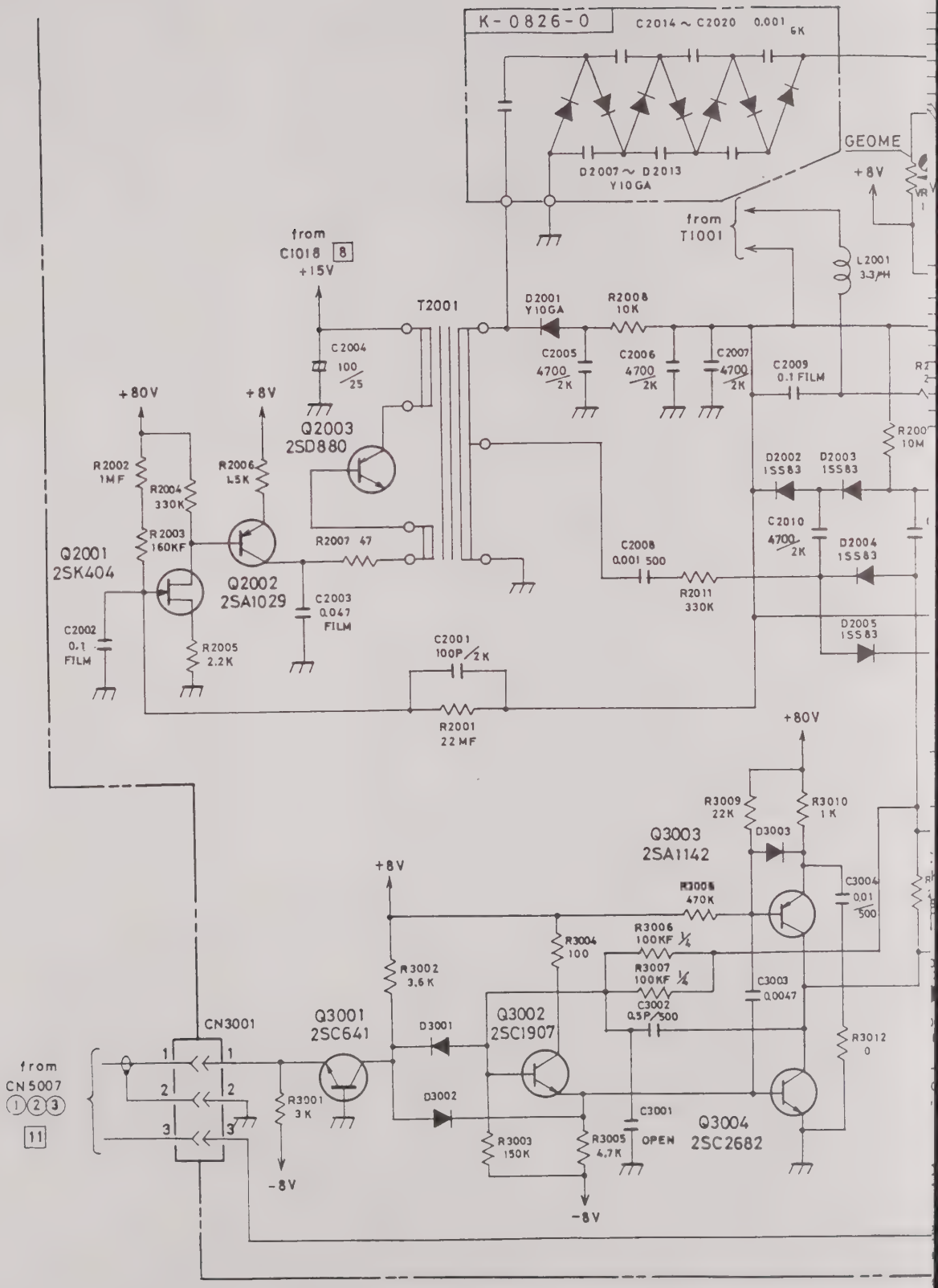
K-0826-0
C2014 ~ C2020 0.001 6K
D2007 ~ D2013
Y10GA
GEOME
+8V
from
T1001
L2001
3.3μH
from
C1018 8
+15V
T2001
D2001
Y10GA
R2008
10K
C2004
100
25
C2005
4700
2K
C2006
4700
2K
C2007
4700
2K
C2009
0.1 FILM
+80V
+8V
Q2003
2SD880
R2002
1MF
R2004
330K
R2006
1.5K
R2003
160KF
R2007 47
Q2001
2SK404
Q2002
2SA1029
C2003
0.047
FILM
C2002
0.1
FILM
R2005
2.2K
D2002
1SS83
D2003
1SS83
C2010
4700
2K
D2004
1SS83
C2008
0.001 500
R2011
330K
D2005
1SS83
C2001
100P/2K
R2001
22MF
+80V
R3009
22K
R3010
1K
D3003
Q3003
2SA1142
+8V
R3008
470K
C3004
0.01
500
R3006
100KF 1/4
R3004
100
R3007
100KF 1/4
R3002
3.6K
C3002
0.5P/500
C3003
0.0047
CN3001
Q3001
2SC641
D3001
Q3002
2SC1907
R3012
0
from
CN5007
1 2 3
11
R3001
3K
D3002
C3001
OPEN
Q3004
2SC2682
R3003
150K
R3005
4.7K
-8V
-8V

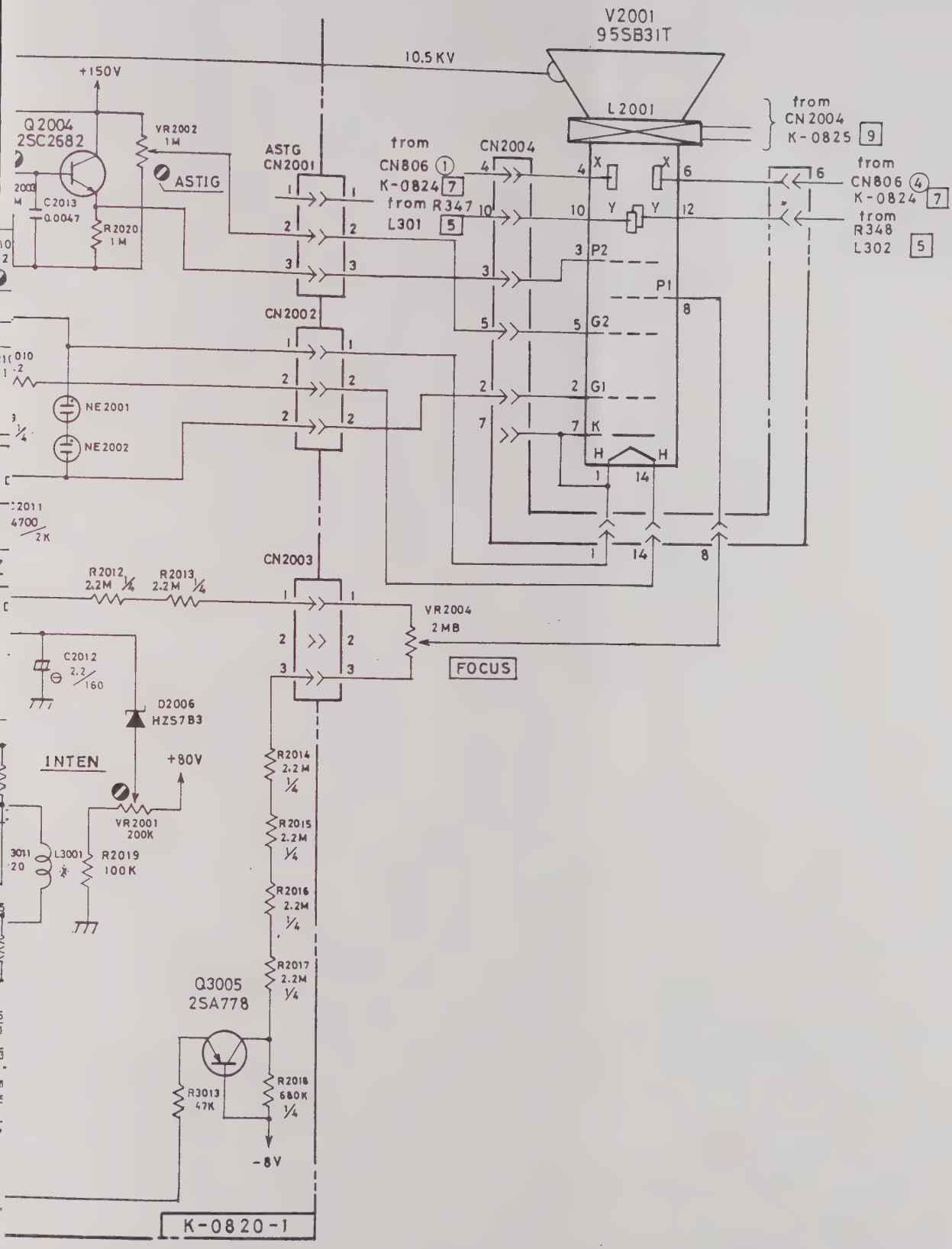

10

SCHEMATIC DIAGRAM 1443

K-0820-0 K-0820-1

HV & Z-AXIS AMP

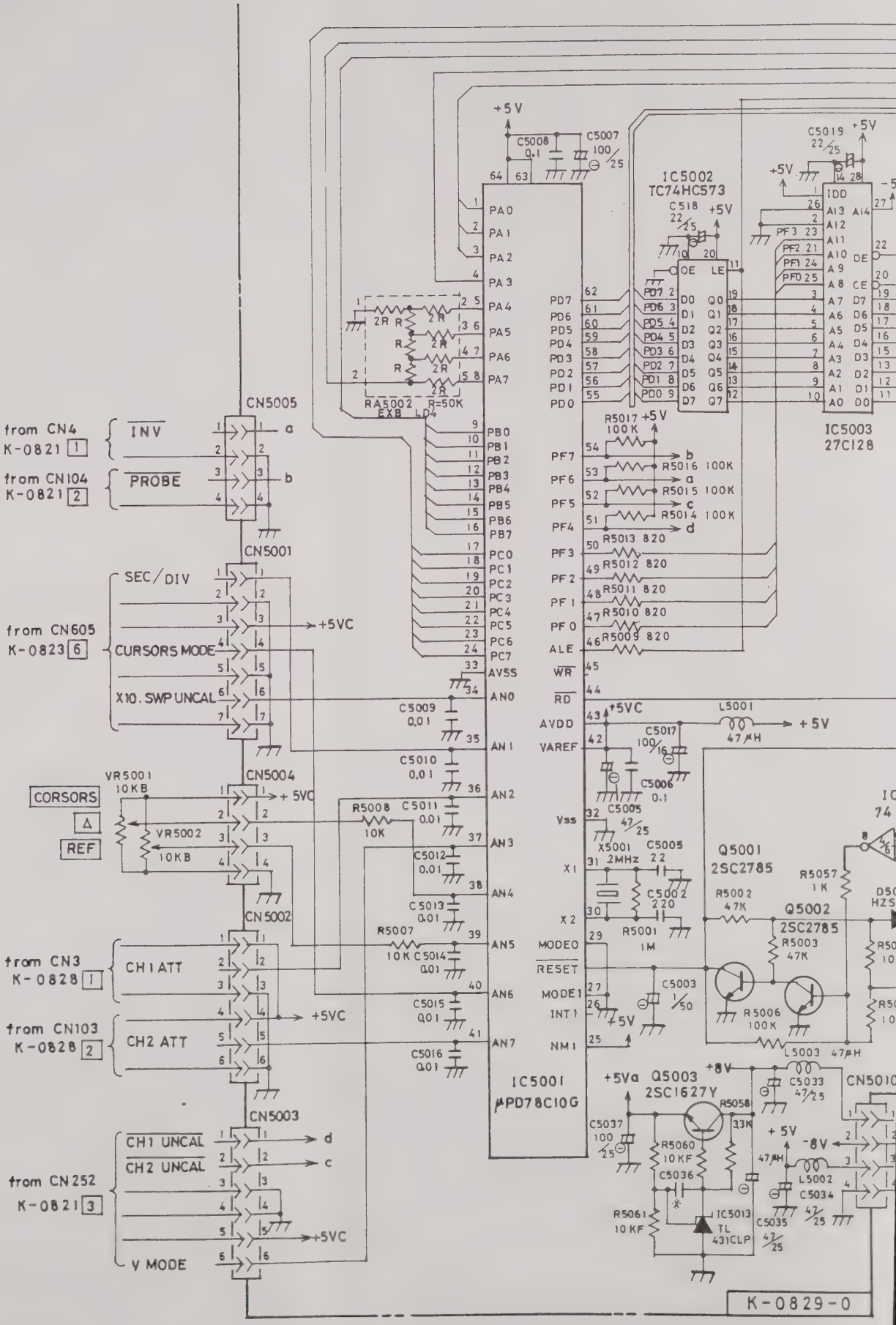

CN5005
from CN4 K-0821 1
INV
from CN104 K-0821 2
PROBE
CN5001
SEC/DIV
from CN605 K-0823 6
CURSORS MODE
X10. SWP UNCAL
+5VC
CN5004
VR5001 10KB
CORSORS
Δ
REF
VR5002 10KB
CN5002
from CN3 K-0828 1
CH1 ATT
from CN103 K-0828 2
CH2 ATT
CN5003
CH1 UNCAL
CH2 UNCAL
from CN252 K-0821 3
V MODE
IC5001 μPD78C10G
IC5002 TC74HC573
IC5003 27C128
RA5002 EXB LD4 R=50K
Q5001 2SC2785
Q5002 2SC2785
Q5003 2SC1627Y
IC5013 TL 431CLP
K-0829-0

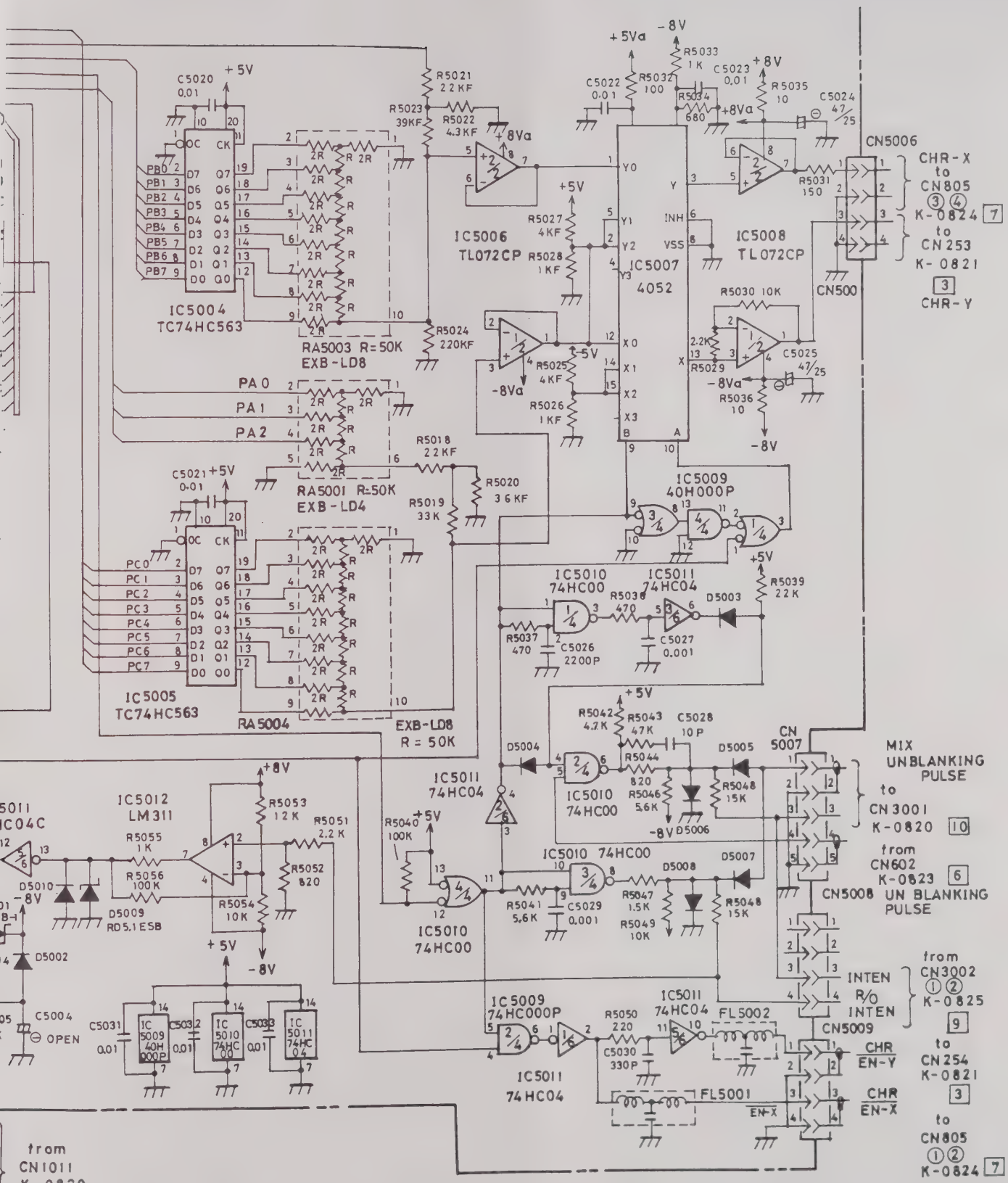

SCHEMATIC DIAGRAM 1443

K-0829-0

READOUT CHARACTOR GEN

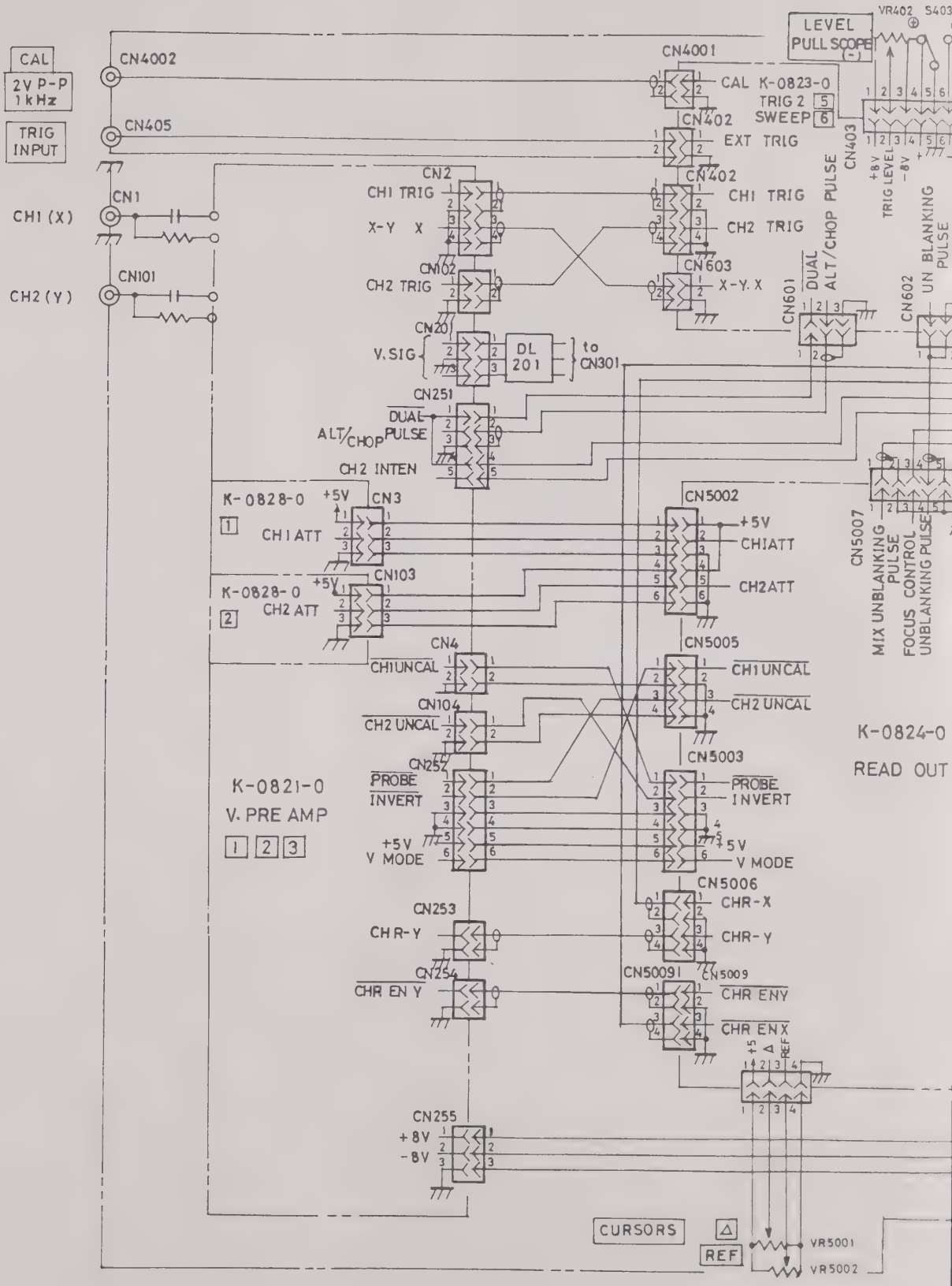
CAL
2V P-P
1kHz
TRIG INPUT
CH1 (X)
CH2 (Y)
CN4002
CN405
CN1
CN101
CN2
CH1 TRIG
X-Y X
CN102
CH2 TRIG
CN20
V. SIG
DL 201
to CN301
CN251
DUAL PULSE
ALT/CHOP
CH2 INTEN
K-0828-0
1
CH1 ATT
+5V
CN3
CN103
K-0828-0
2
CH2 ATT
CN4
CH1UNCAL
CN104
CH2 UNCAL
CN252
PROBE INVERT
+5V
V MODE
K-0821-0
V. PRE AMP
1 2 3
CN253
CH R-Y
CN254
CHR EN Y
CN255
+8V
-8V
CN4001
CAL K-0823-0
TRIG 2 5
SWEEP 6
CN402
EXT TRIG
CN402
CH1 TRIG
CH2 TRIG
CN603
X-Y. X
CN601
DUAL
ALT/CHOP PULSE
CN602
UN BLANKING PULSE
CN5002
+5V
CH1ATT
CH2ATT
CN5005
CH1 UNCAL
CH2 UNCAL
CN5003
PROBE INVERT
+5V
V MODE
CN5006
CHR-X
CHR-Y
CN5009
CHR ENY
CHR ENX
LEVEL
PULL SCOPE
VR402
S403
CN403
+8V
TRIG LEVEL
-8V
CN5007
MIX UNBLANKING PULSE
FOCUS CONTROL
UNBLANKING PULSE
K-0824-0
READ OUT
+5
Δ
REF
CURSORS
Δ
REF
VR5001
VR5002

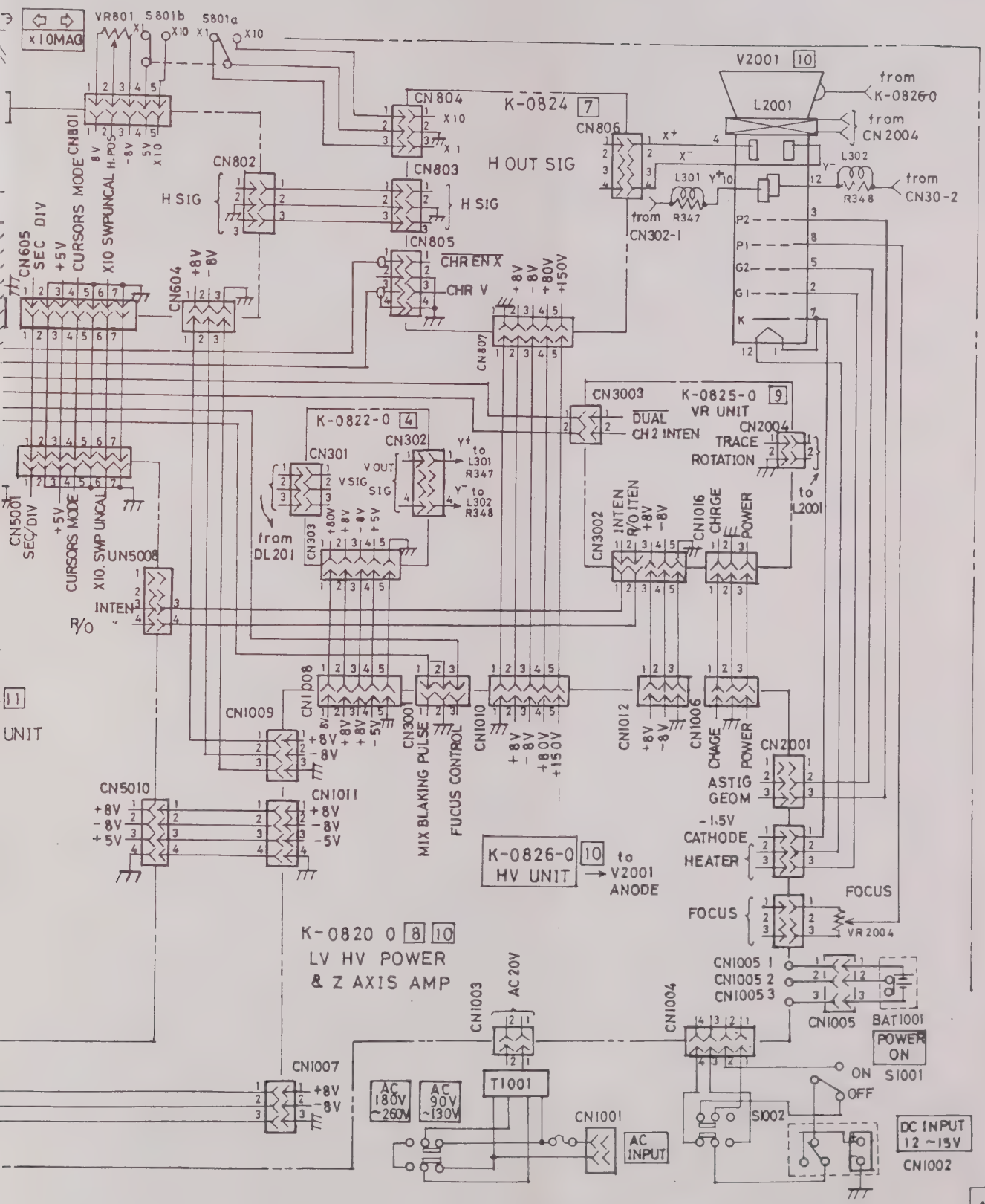

SCHEMATIC DIAGRAM 1443

12

INTER - CONNECTIONS

MODEL 1443 CALIBRATION PROCEDURE

CONTENTS

	Page
Checking Supply Voltage	1
C R T Circuit	2
Vertical Axis Circuit	2
Horizontal and Timing Axis Adjustments	5
Adjustments for Synchronization	8
C A L Signal	8

Notes:

"K" prefix numbers are used for P.C. board identification. The schematics show the P.C. board "K" numbers, and the "K" numbers are used in the following procedures to help rapidly locate a specific P.C. board.

CALIBRATION PROCEDURE

CHECKING SUPPLY VOLTAGE

Refer to Fig. 1

Check that the voltage between ground and each pin on the power supply (POWER PCB K-0820) is within the specified range.

C N 1008 Pin No. 4	+5 V	±0.3 V
C N 1010 Pin No. 2	+8 V	±0.2 V
C N 1010 Pin No. 3	-8 V	±0.2 V
C N 1010 Pin No. 4	+80 V	±3 V
C N 1010 Pin No. 5	+150 V	±5 V
C N 2002 Pin No. 1	-1,500 V	±50 V*

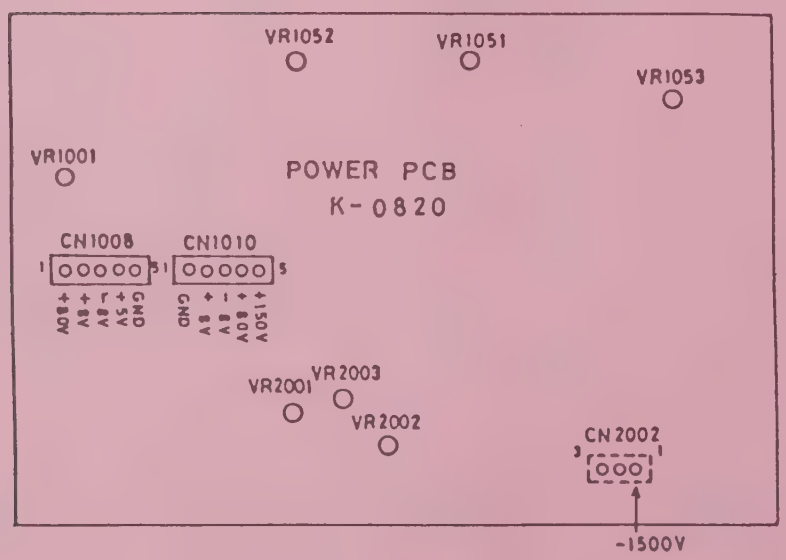

(* using a high voltage probe)

Fig. 1. Power Supply Checking Points

C R T CIRCUIT

Refer to Fig. 2

1. Adjust the "INTENSITY" knob by turning VR 2001 (INTEN) so that the bright line disappears when the knob is in the 10 o'clock position.
2. Set the "FOCUS" knob halfway and "SEC/DIV" to X-Y, then turn VR2003 (GEOME) so that the spot reaches its minimum size.
3. After completing the above, make the spot as round as possible by turning VR2002 (ASTIG).

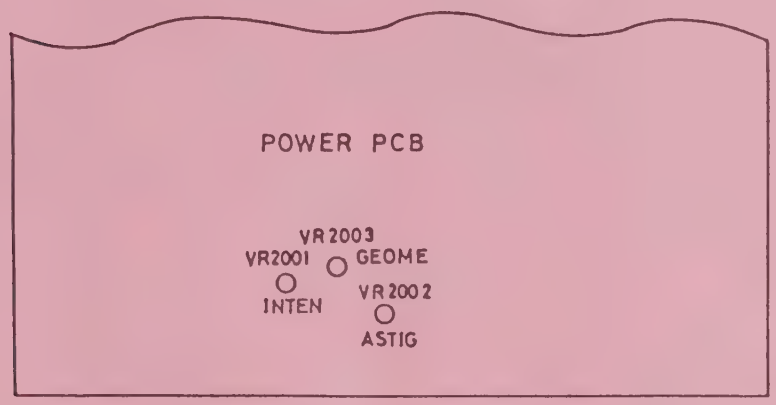

Fig. 2. Rear Side CRT Circuit Controls

VERTICAL AXIS CIRCUIT

1. Adjusting MAIN AMP DC BAL

   Short-circuit pin Nos. 1 and 3 of CN201 (Fig. 4) and rotate VR301 (Fig. 5) to center the trace on the scale.

2. Step balance

   If the trace changes position when "VOLTS/DIV" is turned, adjust by turning VR1 for CH1 and VR101 for CH2 (Fig. 4).

3. Contering position

   Turn the "↑↓POSITION" knob halfway and center the trace on the CRT by turning VR5 for CH1 and VR105 for CH2 (Fig. 4).

4. AC GAIN

   Set "SEC/DIV" to 1ms/DIV, "VOLTS/DIV" to 5mV/DIV and "AC GND DC" to DC, apply a 1kHz square wave and set to 4 div. amplitude. Then, turn VR2 to align CH1 and VR102 to align CH2 (Fig. 4) so that the square wave becomes the continuous line in Fig. 3.

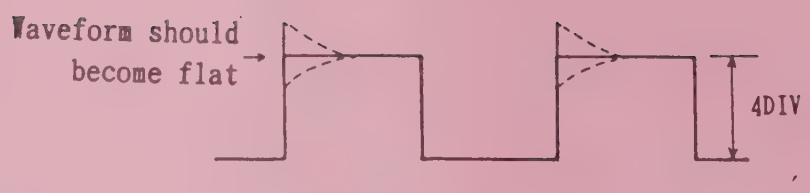

Fig. 3. Adjustment of Square Wave

5. Adjusting sensitivity (using a 1kHz square wave with accuracy of 0.3% or better).
   a. After adjusting as in Step 4, apply a square wave of 20mVp-p ("VARIABLE" knob is in the CAL position).
   b. Turn VR6 to adjust CH1 and VR106 to adjust CH2 (Fig. 4) so that the amplitude of the square wave is 4 div.

Front Panel Side

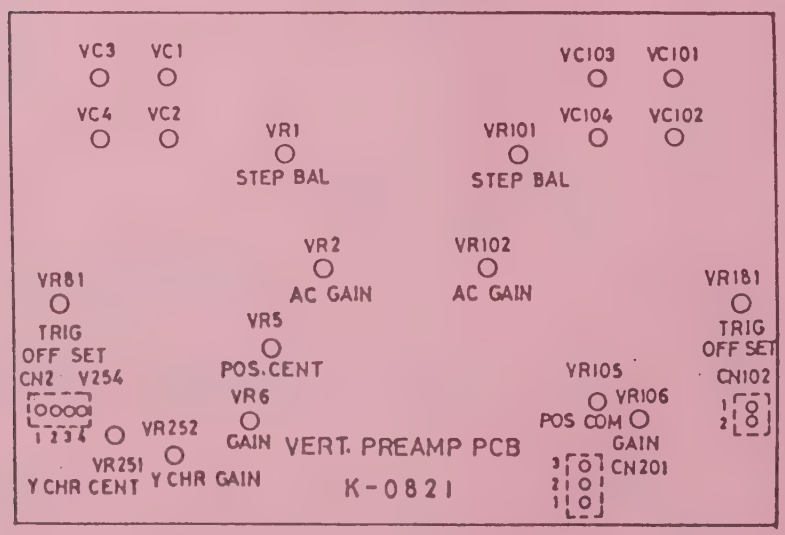

Fig. 4. Location of Vertical Adjustments (Pre-amplifier)

6. Adjusting the input capacitance (using a square wave having a rise time of 1μs or less).
   a. Adjust the wave peaks to 6 div. (AC GND DC should be set to DC) for a range of 0.1V and 1V.

b. Turn the following phase compensating trimmer to adjust the waveform. (Fig. 4).

0.1V	(1/10)	:	VC2 (CH1)	VC102(CH2)
1V	(1/100)	:	VC4 (CH1)	VC104(CH2)

7. Adjusting the input capacitance (when connecting the probe).

   a. Connect the 10:1 probe and set to 5mV/div. Set the peaks to 6 div. and correct the waveform using the trimmer of the probe.

   b. Adjust (AC GND DC should be set to DC) the wave peaks to 6 div. for the ranges of 0.1V and 1V.

   c. Turn the following input capacitance compensating trimmer to correct the waveform (Fig. 4).

0.1V	(1/10)	:	VC1 (CH1)	VC101(CH2)
1V	(1/100)	:	VC3 (CH1)	VC103(CH2)

8. Pulse characteristics (using a square wave having a rise time of approx. 1ms. See Fig. 3.

   Medium range characteristics

   a. Set "VOLTS/DIV" to 5mV and "SEC/DIV" to 0.2 μs.

   b. Apply a square wave of 1MHz and adjust to 6 div. (CH1 or CH2).

   c. Flatten the square wave by turning VC303 (Fig. 5).

   High range characteristics

   d. Under the same conditions as in a. (above), pull x10MAG to magnify the start of the waveform.

   e. Adjust the overshoot with VC301 and VC302 (Fig. 5).

9. Adjusting the trigger offset

   a. Connect the probe of another oscilloscope to Pin No. 1 on the CN2 (Fig. 4) "AC GND DC" should be set to GND 10 mV/div.

   b. Center the trace on the CRT screen, switch "AC GND DC" to DC, turn VR81 by the amount of displacement and center it on the scale (Fig. 4).

   c. As for CH2, connect to Pin No. 1 of the CN102 and adjust VR181 (Fig. 4).

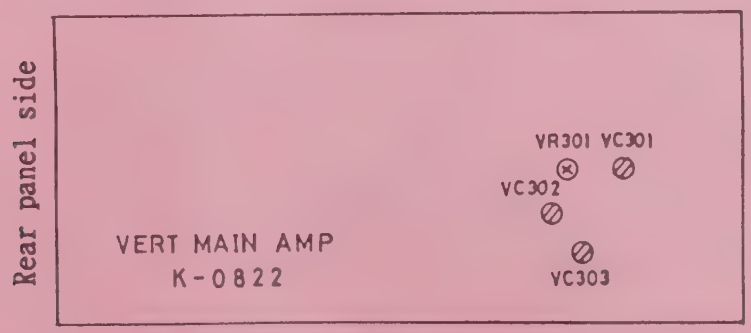

Fig. 5. Location of Vertical Adjustments (Main Amplifier)

10. Adjusting Y AXIS CHR GAIN (See Fig. 6)

    Set the MODE to CH1, VOLTS/DIV to 0.1/DIV and cursor to Δ V1. Turn the REF knob to set the cursor at the uppermost line. Next, turn the Δ knob to set the cursor near the lower most line where Δ V1 is at -0.800V. Next, adjust VR252 (Fig. 4) so that there are 8 divisions between the two cursors.

11. Adjusting Y AXIS CHR CENT (See Fig. 6).

    Under conditions set forth in Step 10 above, adjust VR251 (Fig. 4), so that two cursors are on the two lines, upper and lower.

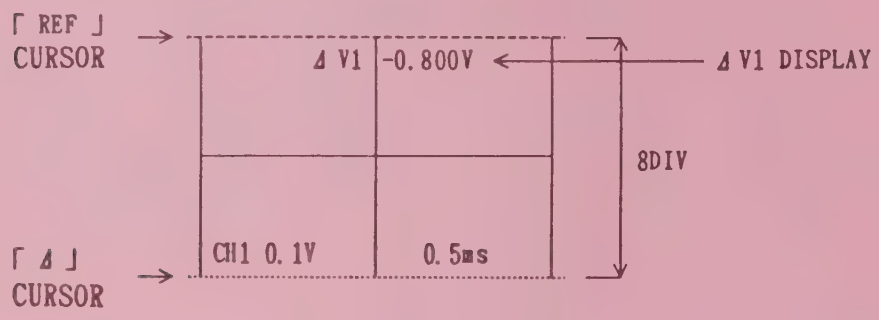

Fig. 6. Location of Display Characters

HORIZONTAL AND TIMING AXIS ADJUSTMENTS (See Figs. 7 and 8)

1. Timing axis and calibration (Use of 0.1μs to 5ms timing axis marker signal generator)
   a. Apply the marker signal to CH1 and set the SEC/DIV to 1ms.
   b. With VR602 (1 ms CAL), each pulse is set to coincide with the graduation.
   c. Set SEC/DIV to 1μs and apply the 1μs marker signal.
   d. With VC601 (1μs CAL), each pulse is set to coincide with the graduation.
   e. Set SEC/DIV to 0.5μs and apply the 0.5μs marker signal.
   f. With VC602 (0.5μs CAL), each pulse is set to coincide with the graduation.
   g. Set SEC/DIV to 0.2μs and apply the 0.2μs marker signal.
   h. With VR603 (0.2μs CAL), each pulse is set to coincide with the graduation.
2. MAG GAIN Adjustments
   a. Set SEC/DIV to 1ms and apply a 0.1ms marker signal.
   b. Pull the ⌈ ⇐ ⇒ POSITION ⌋ knob for the x10MAG setting.
   c. Set VR805 (MAG GAIN) so that each pulse coincides with the graduations.

3. MAG CENT Adjustments

   a. Set SEC/DIV to 1ms and apply at 5ms marker signal.

   b. Pull the [⇐ ⇒ POSITION] knob for the x10MAG setting.

   c. With the [⇐ ⇒ POSITION] knob, set the second of the three pulse at the center of the screen with use of VR804 (MAG CENT).

   d. Press [⇐ ⇒ POSITION] knob and adjust VR804 (MAG CENT) to set the second pulse at the center of the screen.

4. X-Y GAIN Adjustments (See Fig. 7)

   Note: A 1kHz square wave (accuracy, 3% or better) is required.

   a. Apply a 20mVp-p square wave with the controls set as follows:

      SEC/DIV ····· at X-Y

      CH1 [VOLTS/DIV] ····· at 5mV/DIV

      MODE ····· at CH2, X-Y

   b. Adjust VR604 (X-Y GAIN) so that the amplitude of the two horizontal spots is 4 DIV.

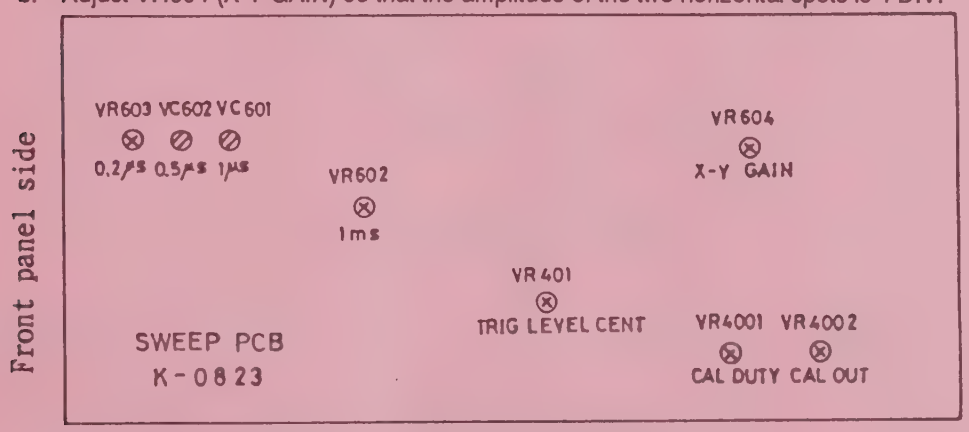

Fig. 7. Horizontal and Timing Axis Adjustments

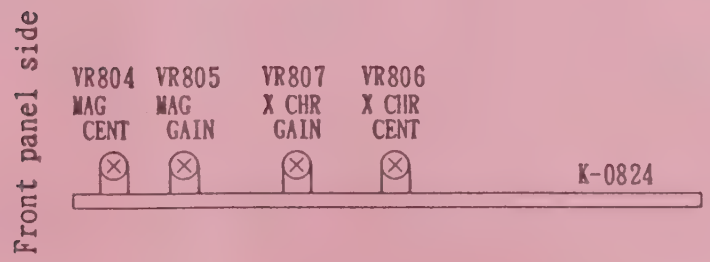

Fig. 8. Horizontal and Timing Axis Adjustments (Main Amplifier)

5. X AXIS CHR GAIN Adjustments (See Fig. 8)
   a. Set ⌈SEC/DIV⌋ to 1ms.
   b. Using ⌈CURSORS⌋ as Δ T, and to set the cursors at each end, rotate the ⌈ Δ ⌋ knob to fully clockwise and REF knob to fully counterclockwise.
   c. At this point, the Δ T cursor indication at upper section on the screen will indicate +10.20ms.
   d. Turn the ⌈ Δ ⌋ knob slightly to the left for Δ T +10.00ms.
   e. To set the interval between the two cursors at 10DIV, adjust VR806 (X CHR CENT) and VR807 (X CHR GAIN).
6. X AXIS CHR CENT Adjustments (See Fig. 9)
   a. Set ⌈ Δ ⌋ knob at fully clockwise for Δ T +10.20ms.
   b. Adjust VR806 (X CHR CENT) so that the two cursors are set symmetrically at the left and right.

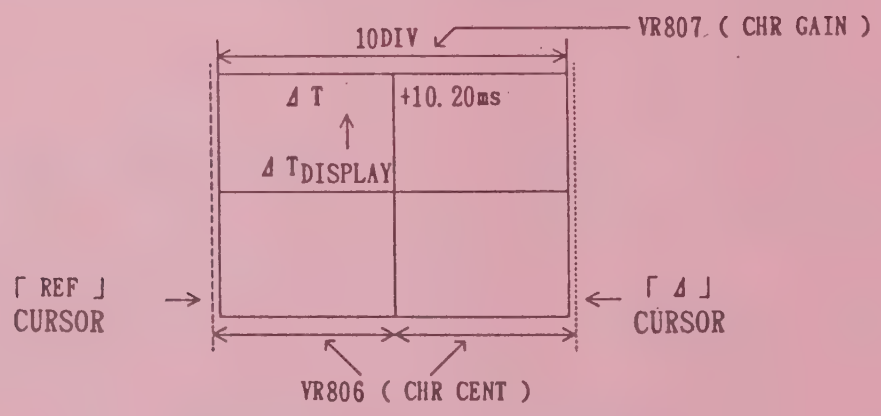

Fig. 9. Cursor Positioning

ADJUSTMENTS FOR SYNCHRONIZATION

TRIG LEVEL CENT adjustments

a. Apply a 1kHz sine wave signal to CH1 and adjust for 6 DIV amplitude.

b. Using TRIG LEVEL knob for synchronizing set the start of the waveform at "0".

c. Alternately select SLOPE (+) and SLOPE (-). Adjust VR401 so that the start of the waveform will be symmetrical.

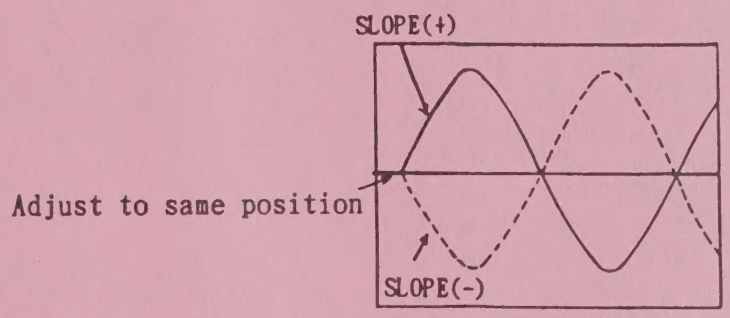

Fig. 10. SLOPE Adjustment

CAL SIGNAL

Refer to Fig. 7.

1. Adjusting the output voltage (using a calibrated oscilloscope)
   a. Connect the probe (10:1) of another oscilloscope to the CAL terminal. Set to 0.1 V/div.
   b. Turn VR4002 so that the output of the square wave is 2Vp-p. (CRT amplitude is 5 div).
2. Adjusting the waveform symmetry of the square wave

   With the controls set as in 1., adjust VR4001 so that the waveform of the square wave comes to 1:1.

MP MASTER
MA34937